ARTIFICIAL INTELLIGENCE APPLICATIONS

EDITOR
Gökalp Çınarer

AUTHORS
Ashish Dhamanda
Muhammad Haseeb Ahmad
Muhammad Faizan Afzal
Muhammad Imran
Muhammad Armghan Khalid
Muhammad Sajid Arshad
Muhammad Zubair
Muniza Javed
Pourya Bazyar

İKSAD
Publishing House

ARTIFICIAL INTELLIGENCE APPLICATIONS

EDITOR

Gökalp Çınarer

AUTHORS

Ashish Dhamanda

Muhammad Haseeb Ahmad

Muhammad Faizan Afzal

Muhammad Imran

Muhammad Armghan Khalid

Muhammad Sajid Arshad

Muhammad Zubair

Muniza Javed

Pourya Bazyar

İKSAD Publishing House

(The Licence Number of Publicator: 2014/31220)
TURKEY TR: +90 342 606 06 75
USA: +1 631 685 0 853
E mail: iksadyayinevi@gmail.com
www.iksadyayinevi.com

ISBN: 978-625-8423-28-0
Cover Design: İbrahim KAYA
December / 2021
Ankara / Turkey
Size = 16x24 cm

CONTENTS

PREFACE

Artificial Intelligence is a set of systems that enable computers with subfields such as evolutionary computing, deep learning, and machine learning to think like humans. Artificial intelligence is used in many fields such as voice recognition, image processing, natural language processing, cyber security, health, agriculture and architecture.

Advances in technology have enabled artificial intelligence applications to become ordinary computer functions. It is quite exciting when a machine can emulate human intelligence and automatically interpret complex systems. Being indifferent to this situation and following technology behind is a great loss in terms of personal development.

Artificial intelligence technology can be applied to every sector such as accurate and fast medical diagnosis, safe autonomous vehicles, unmanned aerial vehicles, social media, food industry, shopping. Today, the general applications of artificial intelligence are machine learning and deep learning-oriented studies. Although it seems nice that algorithms are entering people's lives so much, this situation may be reversed in the coming years. For this reason, it is very important to have information about the applications and studies made in the field of Artificial Intelligence.

In this book, examples of work done in the field of Artificial Intelligence, machine learning algorithms, food industry, agriculture and engineering applications are included.

Gökalp ÇINARER

CHAPTER 1

USAGES OF ARTIFICIAL INTELLIGENCE IN THE AGRICULTURE

Pourya Bazyar[1]

[1] Department of Agricultural Machinery Engineering, Faculty of Agricultural Engineering and Technology, University of Tehran, Karaj 3158777871, Iran; pourya.bazyar@ut.ac.ir

Introduction

Food and Agriculture Organization of the United Nations, the world population will reach over 9 billion by 2050. Rapid population growth, shrinking farmland, dwindling natural resources, erratic climate changes, and shifting market demands are pushing the agricultural production system into a new paradigm. The new agricultural system must become more productive in output, efficient in operation, resilient to climate change, and sustainable for future generations. Artificial Intelligence (AI) holds promise in addressing the challenges of this new paradigm. The United States Department of Agriculture (USDA), Agricultural Research Service (ARS), is the premier agricultural research organization in the world with more than 2 000 scientists conducting agricultural research in more than 90 locations around the United States and in three foreign countries. ARS conducts research in areas such as crop production and protection, animal production and protection, natural resources and sustainable agriculture, as well as food nutrition and food safety. To harness the power of new technologies and transform agricultural research, ARS has established a virtual Center of Excellence (COE) to provide strategic leadership on the application of AI in agricultural research. The field of artificial intelligence with its rigorous learning capabilities have become a key technique for solving different agriculture related problems. Systems are being developed to assist the agricultural experts for better solutions throughout the world. This literature survey covers 100 important contributions where artificial

intelligent techniques were employed to encounter the challenges related to agriculture.

Background

Over the past 50 years, there has been a sustainable development in artificial intelligence due to its robustness in the application and is pervasive in every field. One such field is agriculture. Agriculture faces many challenges on a daily basis and is not smooth running business. Some of the pith problems faced by farmers from seed sowing to harvesting of crops are as follows:

1. Crop diseases infestations
2. Lack of storage management
3. Pesticide control
4. Weed management
5. Lack of irrigation and drainage facilities

Artificial Intelligence and Machine learning has penetrated each and every category mentioned above. Bannerjee et al. (2018) segregated advancements in AI category wise and gave a brief overview on various AI techniques. Computers and technology started penetrating in this sector from 1983 onwards. Since then, there have been many suggestions and proposed systems for betterment in agriculture from the database to decision making process. Filtering out every process, only AI based systems have proved to be the most feasible and reliable one. The AIbased method does not generalize the problem and gives a particular solution to a particular defined complex problem.

The literature survey covers major breakthroughs in the domain of agriculture from early 1980s to 2018. The paper discusses more than fifty advancement in technologies in the sub domain of agriculture. First it discusses penetration of Artificial neural networks and expert systems to solve above. Some usages of AI will be explained.

1. GENERAL CROP MANAGEMENT

In general, crop management systems provide an interface for overall management of crops covering each aspect of farming. The idea of using AI technique in crop management was first proposed in 1985 by McKinion and Lemmon in their paper "Expert Systems for Agriculture" (McKinion & Lemmon, 1985). Another corn crop protection expert system was proposed by Boulanger in his doctoral Thesis (Boulanger, 1983). In 1987, Roach et al. proposed an expert system POMME for management of apple plantation (Roach, et al., 1987). Stone and Toman came up with an expert system for cotton crop management COTFLEX (Stone & Toman, 1989). Another rule base expert system COMAX was formulated by Lemmon for cotton crop management (Lemmon, 1990). A multi-layered feed forward artificial neural network based system was formulated by Robinson and Mort to protect citrus crops from frost damage in Sicily island of Italy (Robinson & Mort, 1997). The input and the output parameter(s) were coded in binary form to train and test the network. The authors used different configurations of inputs to get a model with the highest accuracy. The best model so found had an accuracy of 94% with two output classes and six inputs. An image based AI technique was

proposed by Li, S. K. et al., for wheat crop (Li, ET AL., 2002), by using pixel labelling algorithm followed by Laplace transformation to strengthen the image information. The best network obtained had five hidden layers trained up to 300000 iterations and had an accuracy of 85.9% on average. A fuzzy logic based soybean crop management system was developed by Prakash, C. et al. which provided advices regarding crop selection, fertilizer application and pest related issues (Prakash, et al., 2013).

1.1. PEST MANAGEMENT

Insect pest infestation is one of the most alarming problems in agriculture that leads to heavy ecomonic losses. Over decades researchers have tried to mitigate this menace by development of computerized systems that could identify the active pests and suggest control measures. Many rule based expert systems were proposed which includes Pasqual and Mansfield (Pasqual & Mansfield,1988), SMARTSOY of Batchelor et al., (Batchelor, et al., 1992; Batchelor, et al., 1998), CORAC of Mozny et al. (Mozny, et al., 1993), Knight and Cammell (Knight & Cammell, 1994), Mahaman et al. (Mahaman, et al., 2003), Li et al. (Li et al., 2002), Chakraborty et al. (Chakraborty, et al., 2013), and Ghosh (Ghosh, 2015). The knowledge involved in agriculral management is most of the times imperfect, vague and imprecise hence the rule base expert system may lead to uncertainty. To capture this uncertainty, several Fuzzy logic based expert systems were proposed including Saini et al. (Saini, et al., 2002), Siraj and Arbaiy (Siraj & Arbaiy, 2006), Roussel et al. (Roussel, et al., 2000),

Shi et al. (Shi, et al., 2007), Jesus et al. (Jesus, et al., 2008). An objected oriented approach to frame a rule base was taken by Ghosh et al., in developing TEAPEST, an expert system for pest management in tea (Ghosh, et al., 2003). Here also a phase by phase indentification and consultation process have been adopted. Later this system was redesigned by Samanta and Ghosh by employing a multi-layered back propagation neural network [30] and then reformulated by Banerjee et al., by using radial basis function model to achieve higher classification rates (Samanta & Ghosh, 2012).

1.2. DISEASE MANAGEMENT

Crop diseases are also a matter of grave concern to a farmer. Significant expertise and experience is required in order to detect an ailing plant and to take necessary steps for recovery. Computer aided systems are being used worldwide to diagnose the diseases and to suggest control measures. At very early stage, rule based systems were developed which includes Byod and Sun (Boyd & Sun, 1994), Sarma et al., (Sarma, et al., 2010), Balleda et al. (Balleda, et al., 2014). Tilva et al. proposed a fuzzy logic based model to forecast diseases based on leaf wetness duration (Tilva, et al., 2013). Different artificial neural network based model were designed for disease control in different crops including; Francl and Panigrahi (Francl & Panigrahi, 1997), Babu and Rao (Babu & Rao, 1997), Ismail et al. (Ismail & Mustikasari, 2013), Karmokar et al. (Karmokar, et al., 2015), Sladojevic (Sladojevic, et al., 2016), Hanson et al. (Hanson, et al., 2002) and Hahn et al. (Hahn, et al., 2002). Some hybrid systems were

also suggested. Huang proposed an image processing model coupled with artificial neural network model to classify phalanopsis seedling diseases (Saini, et al., 2002). Sannakki et al. enforced a fuzzy logic approach coupled with image processing to detected percentage of infection in leaf (Sannakki, et al., 2002). A system using k-means segmentation algorithm was developed by Al-Hiary, et al. (Al-Hiary, et al., 2002) and Bashish et al. (Saini, et al., 2002). Dr. Wheat is a web based expert system developed by Khan et al., for diagnosis of wheat diseases (Khan, et al., 2002).

1.3. AGRICULTURAL PRODUCT MONITORING AND STORAGE CONTROL

Apart from pests and diseases monitoring, storage, drying, grading of harvested crops are also very important aspects of agriculture. This section addresses various food monitoring and quality control mechanisms that employ the concept of artificial intelligence. Several fuzzy logic based systems were designed, which includes Kavdir et al. (Kavdir, et al., 2002), Gottschalk et al. (Gottschalk, et al., 2003), and Escobar et al. (Escobar, et al., 2004). The systems developed by using artificial neural networks are to be addresses such as Taki et al. (Taki, et al., 2016), Yang (Yang, et al., 2002), Nakano (Nakano, et al., 1997), Capizzi et al. (Capizzi et al., et al., 2016), Melis et al. (Melis et al., et al., 2016), Miranda and Castano (Miranda and Castano, 2016), Perez et al., (Perez et al., 2004), Martynenko and Yang (Martynenko and Yang, 2006), Movagharnejad and Nikzad (Martynenko and Yang, 2007), Khazaei et al. (Khazaei et al., 2013), Higgins et al. (Higgins et

al., 2010), Cheng et al. (Cheng et al., 2010) and Boniecki et al. (Boniecki et al., 2011).

1.4. SOIL AND IRRIGATION MANAGEMENT

Issues pertaining to soil and irrigation management are very vital in agriculture. Improper irrigation and soil management lead to crop loss and degraded quality. This section highlights some researches carried out in soil and irrigation management assisted by artificial intelligent techniques. Bralts et al. (Bralts et al., 1993). designed a rule based expert system for evaluation of the design and performance of microirrigation systems. Sicat et al. (Sicat et al., 2005) used farmers' knowledge to model a fuzzy based system to recommend crops depending on land suitability maps generated by the fuzzy system. Other fuzzy based systems include Si et al. (Si et al., 2007), Tremblay et al. (Tremblay et al., 2010). Valdes-Vela et al. used a Takagi Sugeno Kang fuzzy inference system to estimate the stem water potential of a plant based on meteorological and soil water content data (Valdes-Vela et al., 2015). An artificial neural network based system for estimation of soil moisture in paddy was designed by Arif et al. (Arif et al., 2013). Other popular systems using artificial neural network for soil and irrigation include Broner and Comstock (Broner and Comstock, 1997). Song and He (Song and He, 2005). Zhai et al. (Zhai, et al., 2006), Patil et al. (Patil, et al., 2009), Hinnell et al. (Hinnell, et al., 2010), Junior et al. (da Silva, et al., 2016) and Antonpoulos et al. (Antonopoulos, et al., 2017). Manek and Singh compared several neural network architectures in prediction of rainfall using four

atmospheric inputs (Manek and Singh, 2002). This study found that radial basis function neural networks perform best in comparison to other models.

1.5. WEED MANAGEMENT

Application of herbicides have a direct implication on human health and environment as well. Modern AI methods are being applied to minimize the herbicide application through proper and precise weed management. Pasqual (Pasqual, 1994) designed a rule based expert system for identifying and eliminating weed in crops like oats, barley, triticale and wheat. Burks et al. (Burks, et al., 2000) used machine vision with a back propagation trained neural network to identify weeds of five distinct species. Burks et al. (Burks, et al., 2005) compared three different neural network models mainly back propagation, counter propagation and radial basis function based model with the same set of inputs as the previous paper and found that back propagation network ISSN 2319 – 1953 International Journal of Scientific Research in Computer Science Applications and Management Studies IJSRCSAMS Volume 7, Issue 3 (May 2018) www.ijsrcsams.com performs best with 97% accuracy. In another approach by Shi et al., (Shi, et al., 2007) was developed by using image analysis and neural network. The other works reported by Eddy et al. (Eddy, et al., 2008), and Barrero et al. (Barrero, et al., 2016) were very remarkable.

2. Computer vision and agriculture

The papers were grouped into three groups: diseases and pests, grain quality and phenology and phenotyping. Table 1 shows a summary of the main information about each paper.

Table 1: Resume of the eligible papers into systematic review

#	References	Year	Group	Crop	Device	Target	Classifier
1	Chung et al. (2016)	2016	Diseases	Rice	Scanner	Seedlings	SVM
2	Shrivastava et al. (2016)	2016	Diseases	Soybean	Camera	Leaves	SVM
3	Liu et al. (2016)	2016	Diseases	Wheat	Camera	Field	SVM
4	Pires et al. (2016)	2016	Diseases	Soybean	Scanner	Leaves	SVM
5	Han et al. (2015)	2015	Diseases	Wheat	Camera	Field	SVM
6	Boniecki et al. (2014)	2014	Diseases	Wheat	Scanner	X-ray	MLP
7	Sabanci et al. (2017)	2017	Quality	Wheat	Camera	Kernels	ANN
8	Sun et al. (2016)	2016	Quality	Rice	Camera	Kernels	DBN
9	Liu et al. (2016)	2016	Quality	Rice	Camera	Kernels	SVM
10	Shrestha et al. (2016)	2016	Quality	Wheat	Camera	Kernels	ANN
11	Singh and Chaudhury (2016)	2016	Quality	Rice	Camera	Kernels	BPNN
12	Olgun et al. (2016)	2016	Quality	Wheat	Camera	Kernels	SVM
13	Zareiforoush et al. (2015)	2015	Quality	Rice	Camera	Kernels	Fuzzy
14	Kezhu et al. (2014)	2014	Quality	Soybean	Camera	Kernels	BPNN
15	Sun et al. (2014)	2014	Quality	Rice	Camera	Kernels	SVM
16	Ebrahimi et al. (2014)	2014	Quality	Wheat	Scanner	Kernels	ANN
17	Serranti et al. (2013)	2013	Quality	Wheat	Hyperspectral	Kernels	iPLS-DA
18	Naik et al. (2017)	2017	Phenotyping	Soybean	Camera	Plant	SVM
19	Sadeghi-Tehran et al. (2017)	2017	Phenology	Wheat	Camera	Field	SVM
20	Zhu et al. (2016)	2016	Phenology	Wheat	Camera	Field	SVM
21	Lu et al. (2016)	2016	Phenology	Maize	Camera	Field	ANN
22	Lu et al. (2015)	2015	Phenology	Maize	Camera	Field	SVM
23	Guo et al. (2015)	2015	Phenology	Rice	Camera	Field	SVM
24	Kurtulmuş and Kavdir (2014)	2014	Phenology	Maize	Camera	Field	SVM
25	Romualdo et al. (2014)	2014	Phenology	Maize	Scanner	Leaves	Bayes

2.1. Grain diseases and insect infestations

Grain production is susceptible to a number of adverse factors related to the occurrence of diseases or infestation by pests and insects. Such factors may trigger negative effects on crop development or reduce grain quality and, consequently, its market price. The detection and accurate identification of diseases in grain crops have great importance for their effective management in order to guarantee productive and sustainable agriculture. Rapid identification in a pest infestation situation, for example, ensures that the response can be efficiently delivered and the necessary control measures can be taken.

The diagnosis of plant diseases is usually performed visually and may present flaws due to its laborious and subjective nature. In this sense, work was carried out with the aim of proposing methods of computer vision with artificial intelligence to automate the process of detection of diseases in plants. The automatic detection of diseases from images includes, among other factors, the determination of the most discriminative characteristics for the efficient recognition of the disease. Thus, you can use classification models to categorize an image into a healthy or sick class. However, when one considers the detection by images obtained in the field, one of the challenges is the presence of complex backgrounds and, consequently, the presence of interferences in the scene like occlusion, soil, plants of other species, specular reflection, among others (Barbedo, 2016). In case of pest detection, traps can be used to improve the quality of the image segmentation and accurate the process to count the insects being in the scene. However, this method requires the previous management of that species. In addition, the coloration of some species are very close to those of the plant and, in this case, make it difficult to identify them. Finally, it is important to also emphasize the variability of the size and shape of these insects due to their species or stage of development.

2.1.1. Bakanae detection in rice crops

Chung et al. (2016) proposed a method to classify three-week-old seedlings in healthy and infected with Bakanae disease.Bakanae is a rice (Oryza sativa L.) disease caused primarily by the fungus Fusarium fujikuroi. When infected, plants exhibit color changes in the leaves (they become more yellowish), or morphological abnormalities such as stem elongation, stunting, or a greater angle between the leaves and the stem. The pathogen infects the grains in the fields and, during storage, multiplies itself by contaminating the seeds and spreading in the crop. The symptoms present great complexity and variability as they vary according to the resistance of the plant. In this way, they make detection through computer vision a challenge. The presented method uses plant images obtained using a scanner. The morphological and color attributes are quantified and the anatomical points of the plants are automatically identified. The only exception is the stem base that needs manual identification. In the preprocessing step, the background is removed using a thresholding operation. In the processing stage, morphological and coloring attributes are obtained to describe the development of the plant and indirectly provide its physiological status. SVM (Support Vector Machine) is used for the classification process. Two classifiers arranged in cascade are used to detect and determine the health condition of the plant. The first classifier is responsible for distinguishing between healthy and contaminated plants. The second classifier has the function of distinguishing the different levels of contamination.

2.1.2. Computer vision methods aptitude to detect leaf diseases in soybeans

Shrivastava et al. (2016) explored the aptitude of computer vision methods to detect and categorize soybean plant foliar diseases. In the study, the following descriptors were analyzed: histogram; WDH (Wavelet Decomposed Color Histogram); BIC (Border/Interior Classification), which consists of a compact method to characterize each pixel of the image as border or interior; the CCV (Color Coherence Vector), which allows the comparison of images using their color density; the CDH (Color difference histogram), which allows the visual appearance of the images to be coded; the LBP (Local binary pattern) descriptor, which is used to encode image texture information; the SSLBP descriptor (Square Symmetric Local Binary Pattern), similar to the previous one, however, aiming to reduce the size of the LBP; the LAP (Localized angular phase), which calculates the magnitude and the phase of the Fourier transform of the neighbors of each pixel and serves to encode texture information; and the SEH (Strutucture Element Histogram), which encodes both color and texture information. For the classification, three models were analyzed: SVM, KNN (k-Nearest Neural Network) and PNN (Probabilistic Neural Network). Among the main results, it can be highlighted that BIC, histogram, and WDH presented the best performances in the detection of soybean leaf diseases analyzed in the study. The CDH and LAP descriptors were more robust for unfocused images. Finally, among the classification methods utilized, the best performance was obtained by KNN and SVM.

2.1.3. Aphids detection in wheat

Aphids are one of the pests that affect the wheat crop. These insects feed on the sap of the wheat phloem affecting its development and can transmit a series of viral pathologies. Currently, the most widely used method for identifying and counting is still the manual. In order to monitor populations of aphids and to identify the species present in the field, Liu et al. (2016) proposed the SMH method (Support Vector Machine, Maximally Stable Extremely Regions and Histograms of Oriented Gradient Method). The method combines the use of SVM, the MSER (Maximally Stable Extremal Regions) algorithm, and HOG (Histogram of Gradients). The images used for training the classification model were obtained using conventional cameras positioned at a lateral angle to the plants during the period between the elongation and emergency stages. In the pre-processing step, filters are used to enhance contrast and reduce noise. In this step, the use of the MSER algorithm aims to simplify the background of the images. In the extraction step of the image attributes, the HOG descriptor is obtained to be used as a parameter for classification using SVM for the presence or absence of aphids. The proposed method was tested with different densities of aphids, color or location in the plant. The SMH was compared with five other methods commonly used in the detection of aphids using three species that differ in their coloration. The results demonstrated superior performance for aphid detection.

2.1.4. Local descriptors to detect soybeans diseases

Pires et al. (2016) proposed a method of automated disease detection in soybean. The method is based on local descriptors and the BOV (Bag of Values) method for encoding the input vectors for the classifier. The leaves were obtained in soybean plantations in Brazil. After collected in the field those leaves were scanned in order to generate images. The use of local descriptors proves to be robust to occlusion and do not require segmentation of the image to be used. The method evaluated five different descriptors: SURF (Speeded-Up Robust Features), HOG, DSIFT (Dense Scale-invariant Feature Transform), SIFT (Scale-invariant Feature Transform) and PHOW (Pyramid histograms of visual words). For the classification, two classes were defined, sick and healthy, in an SVM classifier.

2.1.5. Detection and evaluation of leaf spot severity in wheat

Han et al. (2015) proposed a computer vision method to automatically identify diseases that cause leaf spot in rice. The images were obtained in the field, so it was necessary to treat the background objects. Due to the noise present in the images, it is critical first to extract the target plant and then to identify which disease patterns are present in its leaves. For extraction of the attributes of the image, the first operation performed is the segmentation. To separate the target sheet from the background, the authors used the MCW (Marker-Controlled Watershed) algorithm. Once the target sheet is identified, it is necessary to obtain the characteristics of the disease that may be present in it. For this purpose, the SLIC algorithm (Simple Linear

Iterative Clustering) Superpixels was used because it groups the pixels of the image into small regions with some meaning. The attributes selected for classification are texture (obtained using GLCM (Gray Level Co-occurrence Matrix)), gradient, Gabor, and attributes inspired by biology. One of the reasons for including gradient features was the nonuniformity of illumination of the artifacts. The classification model adopted for the diagnosis of diseases was the SVM. For the severity measurement, the Dice coefficient was used. The results were compared with a simple neural network. In all cases, the proposed method presented better performance.

2.1.6. Sitophilus granarius detection in stored wheat grains

Another pest that can cause extensive damage to stored grains in silos is the Sitophilus granarius, also known as “granary weevil”. Detection of this type of infestation can be difficult and usually requires the presence of a specialist, increasing the time and cost of this type of assessment. Boniecki et al. (2014) proposes to identify the presence of this insect in grains. The method consists of using images obtained with a low-energy X-ray apparatus, in order to identify internally damaged grains. The grains are arranged on X-ray plates to produce the images. These are initially binarized using the thresholding operation. Conventional methods of image analysis are used to identify some attributes such as grain circumference, area, vertical and horizontal size. From these values, it is possible to calculate the attributes that will be used as input for the classification model. The eight attributes selected by the authors were: non-dimensional shape

coefficient, Feret coefficient, two proportions of circularity, Malinowska coefficient, area, circumference, and cultivar. The neural model selected for classification is the MLP (Multi-Layer Perceptron). The configuration of the network that presented the best results was the one that uses three layers. This configuration has obtained the highest number of properly sized damaged grains. The sensitivity analysis of the neural network helped to identify the order of importance of grain identification characteristics. Cultivation, Feret coefficient, and area of the grain were the most important for the detection of the presence of infestation in wheat grain.

2.2. Grain quality

Grain quality is a complex phenomenon influenced by several genetic and environmental factors. Conventional optical techniques adopted by the industry for grading wheat grains usually present high misclassification error rates(Serranti et al., 2013). In this sense, the use of machine learning techniques for image classification has been highlighted in recent years as a way to build more accurate and intelligent classification systems. However, unlike other industrial products, the size, color, and texture of agricultural products are not defined by a single mathematical function making the task of classification challenging for computer vision systems. Computer vision systems are an alternative to manually inspecting grain samples. Information on grain type and quality are required at various stages during the grain processing process. Contrary to expectations, however, visual inspection of these products is tedious and time-

consuming. The operator usually loses concentration after hours of work due to fatigue, tired vision or inadequate lighting. Thus, an automatic classifier can prevent human errors in the quality assessment process, making it an alternative to manual inspection (Singh and Chaudhury, 2016).

2.2.1. Classification of wheat grains using Artificial Neural Network

Sabanci et al. (2017) presented a computer vision system that uses a simplified classification approach with a high index of accuracy. The aim of the system is to classify wheat grains of the species Triticum aestivum and Triticum durum according to their visual characteristics using an artificial neural network of the MLP type. The images are obtained by a camera at an angle perpendicular to the grain. Then those images are converted to grayscale, binarized using the Otsu method and segmented using the thresholding operation. The characteristics of size, color and texture are captured for each grain, with the purpose of serving as input to the classification method. In the study, seven visual characteristics of the grain were selected: length, length and width ratio, green, blue, green ratio, homogeneity, and entropy. The last two, concerning texture, are obtained using the GLCM method. The ANN (Artificial Neural Network) based on MLP with three layers was able to classify in bread wheat and durum wheat.

2.2.2. Recognition of fungal colonies in rice using computer vision and machine learning techniques

Sun et al. (2016) investigated the potential of using computer vision with conventional and deep learning techniques of machine learning applied with detection of mould colonies in unhulled paddy caused by microorganisms such as Aspergillus and Penicillium. The system for obtaining the images consists of a camera, two LED strips, a camera holder and a holder for the sample on a black base. In the pre-processing step, the black background of the images is removed and the size of images normalized. The center pixel coordinates are calculated to eliminate interference from the plate used for sample deposition. The identification of the infected regions is done through the color information of the image. For this, two images of 512 × 512 pixels are generated: one in grayscale and one in RGB. The vector of 64 color attributes is obtained from the 16-level histogram for the grayscale image and for each of the color channels of the RGB image. The areas where the fungus is present in the sample images do not have a uniform color, texture or shape. Due to this fact, the segmentation method using threshold is useless for the segmentation of the areas of interest. In order to deal with these limitations, the PSR (Pitch Segmentation Recognition) method was adopted for segmentation. The use of the SPA (Successive Projection Algorithm) algorithm was evaluated to reduce the number of attributes of the images from 64 to 14. The attributes number is validated using the RMSECV (Root Mean Square Errors of Cross Validation) method. Classification methods such as SVM, BPNN (Back-Propagation

Neural Network), CNN (Convolution Neural Network) and DBN (Deep Belief Network) models are compared. Although the DBN method presents the best results in the study, the SVM model can obtain good results for different classification tasks in agriculture since the values obtained are slightly lower than the DBN model. The SVM model depends on the support vectors that are extracted from the input data. Within thenetwork of the MLP type. The images are obtained by a camera at an angle perpendicular to the grain. Then those images are converted to grayscale, binarized using the Otsu method and segmented using the thresholding operation. The characteristics of size, color and texture are captured for each grain, with the purpose of serving as input to the classification method. In the study, seven visual characteristics of the grain were selected: length, length and width ratio, green, blue, green ratio, homogeneity, and entropy. The last two, concerning texture, are obtained using the GLCM method. The ANN (Artificial Neural Network) based on MLP with three layers was able to classify in bread wheat and durum wheat.

2.2.3. Shadow-based method to quantify the percentage of filled rice grains

As stated by Liu et al. (2016) rice grain filling is a critical factor in determining grain yield. They presented a method for calculating the percentage of rice grains filling using shades. The method uses four light sources to generate grain shadow in four directions. The difference between the shadows of the filled grains and the unfilled grains is evaluated through image analysis and an SVM classifier. The

system was designed to be used as an online assessment method. For this, a grain transport belt is used that allows the analysis at a speed of 40 to 50 grains/s. In the pre-processing step, the RGB images of the seeds with the shadows in the four directions are segmented using binarization. From the binarized image, you can extract information such as grain area and shadow area. Plus, two measurements are also determined: the ratio of the circumscribed rectangular area of the shadow and the ratio of the distance between the centroid and the circumscribed rectangle of the shadow. Both measurements can be used to distinguish filled grains from unfilled grains. The classification model adopted is the SVM. The results indicated that the method is reliable and can be used as a way of rapid evaluation of rice grains. As the filled grains are thicker than the unfilled ones, the shade of these will be wider. In this way, it is possible to use a sorter to separate the grains.

2.2.4. A computer vision approach using two cameras to identify germinated wheat grains

High moisture before or during harvesting can lead to premature germination of wheat grain. This condition causes a reduction in grain quality. Shrestha et al. (2016) propose a computer vision system that uses two cameras to separate and identify germinated wheat grains in controlled space. The system allows classification into three categories: healthy grains, damaged by germination and severely damaged by germination. The image acquisition system consists of two cameras: one positioned at the top and one positioned at the base.

The segmentation technique adopted is MCW. The Watershed algorithm always produces closed object contours in addition to being computationally feasible. The approach of the use of markers aims to deal with the problem of the exaggerated segmentation of objects due to nature and the noise present in the images. It is also important to avoid grains not being overlapped to improve the accuracy of the grading method. The images produced by the two cameras are used to extract the morphological and non-morphological characteristics of the grains. The morphological characteristics used are perimeter, elliptic eccentricity, length of the main axis and relation of the length of the convex hull of the grain with its perimeter. The non-morphological characteristics used are RGB color, grayscale standard deviation, and texture. Grains damaged by germination usually have a yellow, green or dark brown coloration and may also have a whitish coloration. Such color changes are not present in healthy grains. To improve the accuracy of the classification method, it is important to avoid overlapping grain in the image. For classification, an artificial neural network was used that receives the 16 input parameters.

2.2.5. Classification of rice grains using BPNN and wavelets

Singh and Chaudhury (2016) propose the use of BPNN neural networks and decomposition using wavelets to classify rice grains. The approach uses two types of cameras to acquire the images: the first, present in cell phones that have a resolution of 0.3 megapixels and the second, a conventional point-and-shoot that has resolution of 12- megapixel. The images are obtained under the condition of natural

light in the morning to reduce shadow interference in the image. The extraction of attributes from the images is performed using three approaches. The first consists of extracting 18 color attributes (RGB and HSI). The second and third approaches are to use the GLCM method and the wavelet-based decomposition for each color channel (R, G and B), respectively. The GLCM method is intended to handle texture attributes. These refer to a connected set of pixels that occur repeatedly in an image and are related to the intensity variation on a surface. For the description of texture attributes, the most accepted models are those based on the use of co-occurrences. In the discrete wavelet transform, an image signal can be analyzed using a set of filters followed by a decimation operation. The classification model uses a four-layer BPNN neural network. The study also compares the proposed method with other classifiers: SVM, k-nearest neighbor and naive Bayes. Among the other results obtained, we can highlight three. The first shows that it was necessary to use an adaptive thresholding function to ensure the convergence of the network. The second one points out that the approach that uses GLCM table demands greater processing than the one based on wavelets. And, finally, the use of BPNN presented better results when compared to the other methods.

2.2.6. Wheat grains classification using DSIFT and SVM

Olgun et al. (2016) evaluate the performance of using DSIFT technique in conjunction with an SVM classifier to classify wheat grains in 40 different species. SIFT is a computer vision algorithm to

represent and identify objects with some differentiated local attribute. The DSIFT algorithm is derived from the SIFT algorithm. The main difference between them is that DSIFT uses a sampling procedure to reduce the cost of SIFT. Initially, the authors approach extracts the DSIFT attributes from the image. Following, the method of k-means is used on this set of attributes. Finally, the BOW model is constructed from the histogram of the clustering attributes obtained in the previous step. The objects of interest are classified, using the BOW model, through an SVM classifier. Prior to constructing the BOW model, the size of the set of attributes obtained by DSIFT should be reduced to optimize processing and improve accuracy. In this sense, the method of k-means clustering was applied.

2.2.7. Classification of rice using a fuzzy inference system

Zareiforoush et al. (2015) have used computer vision and fuzzy inference methods in the construction of a decision support system for quality classification of polished rice. The system uses two quality indices for the classification of images captured in a computer vision system: the degree of milling (DOM) and the percentage of broken kernels (PBK). The approach captures the images in RGB and segments the rice grains using thresh holding. The PBK measure is obtained from the grain length in the images. The DOM measurement consists of evaluating the gray gradient. By the intensity of the gray-scale, it is possible to evaluate the amount of light passing through a sample of rice. The greater the amount of bran remaining on the grain surface, the lower its translucency. To evaluate the amount of light,

the co-occurrence matrix of a gray gradient is extracted from the images. This matrix shows the intensity distribution on a gray-scale for each pixel of an image and what are the spatial relationships to each other. The DOM and PBK attributes are used as input to the Fuzzy Inference system. The join function maps the input values into five classes: very low, low, medium, high, and very high. The combination of the five classes of each attribute gave rise to 25 fuzzy rules of evaluation. In the defuzzification step, the method of calculating the area centroid is used to obtain the value of the sample quality. The system was superior when compared to the expert judgment.

2.2.8. Identification of diseases in soybean seeds using BPNN

Kezhu et al. (2014) proposed a machine vision method combined with BPNN to identify diseases in soybean seeds such as soybean frogeye, mildewed soybean, worm-eaten soybean and damaged grains. The acquisition of the images is performed from a specific device for the experiment. This device consists of a box of size 100 cm × 30 cm × 30 cm that does not allow the penetration of outside light. At its base is placed a black fabric that prevents light reflection. The system has a light-coupled ring-shaped light source capable of distributing light equally in all directions. The camera is positioned 60 cm above the grains, allowing the acquired images to be sharper, more accurate and easier to analyze. The system also has an illuminometer to measure the intensity of light. The METS (Minimum Error Threshold

Selecting) method is used to separate the background of the image. Holes and noises are treated by means of morphological operations. In the end, the Watershed algorithm is used to handle cases where the beans are very close. The characteristic extraction step is to obtain morphological, color and texture parameters of the grains. The PCA (Principal Component Analysis) algorithm is used to reduce the vector dimensionality of the image attributes from 39 to 12 dimensions while maintaining 99% of the primary data from the experiment.

2.2.9. Analysis of milled rice grains using SVM

Chalkiness is an important factor to determine rice quality. Adverse factors such as harvesting immature grains and high moisture can affect it in a negative way. Usually, the evaluation is performed by manual inspection. However, in order to improve the efficiency of the quality process, the percentage of chalked grains should ideally be measured from grains randomly distributed in a sample. A challenge for automatic detection is the connected grains that are invariably present in the sample and separating them manually would significantly reduce process efficiency. Sun et al. (2014) proposed an automated system for analysis of the percentage of grains in rice. The algorithm deals with the separation of grains automatically. After segmentation, it is possible to obtain the number of grains present in the image and the specific information of the grain. It is known that the chalked areas are easily detected by the gray coloration. However, when the germ is not extracted completely the accuracy of the method may be affected. To deal with this situation, the system detects the

location of the likely area of germ and considers this information in the classification process. Grain classification is done using the SVM method.

2.2.10. Automatic wheat purity measurement system

Ebrahimi et al. (2014) present a computer vision system that uses neural networks and an imperialist algorithm to automatically detect the purity of wheat. The experimental data used consist of 52 parameters of color, morphology, and texture extracted from images. The algorithm combines ICA (Imperialist Competitive Algorithm) and ANN to achieve two purposes: to find the set of best parameters and to create a robust classification system. The system is trained to classify wheat grains and impurities, In the first one, the elimination of shadows using the RGB and HSI color spaces and mathematical operations of the images is carried out by means of a table scanner. The selection of attributes that characterize the objects of interest is one of the most significant challenges in pattern recognition. purpose of the feature selection process is to identify the ideal number of attributes that generate the expected results in the algorithms This process may be non-intuitive because parameters that perform poorly when used separately may have better results when used together. ICA is used as a way to optimize the number of extracted features.

2.2.11. Development of a method using hyperspectral images for detection of wheat grains damaged by Fusarium, mottled and vitreous

Serranti et al. (2013) developed a method based on the classification of hyperspectral images for identification of three types of wheat (Triticum durum): vitrified, yellow berry and damaged by Fusarium. Vitreous grains are hard, translucent and amber. Non-vitreous grains are opaque and soft. The vitreous degree is, therefore, an important quality factor for wheat because it improves the quality of the flour and the color of the foods produced with it. In contrast, yellow berry or mottled grains adversely affect the quality of the flour produced because of its yellowish color and the soft grain appearance. However, the mixing of predetermined quantities of mottled and vitrified grains is tolerated by the industry. Grains affected by Fusarium have low market interest and, consequently, reduced final sales price. This is due to concerns about the food safety of wheat because the contamination caused by this type of fungus causes in the presence of mycotoxins in the grain. Image acquisition consists of obtaining hyperspectral images of selected wheat grains in the laboratory using a device equipped with an HSI (Hyperspectral Imaging) system operating in the near-infrared range (1000–1700 nm). The PCA technique is used for exploratory purposes to analyze the common characteristics of the samples and their groups: samples characterized by similar spectra can be grouped into the same product class. However, PCA is an unsupervised method and cannot be used to construct a predictive model, such as for classifying samples. In this

sense, the PLS-DA (Partial Least Squares Discriminant Analysis) technique is used to identify the model capable of classifying the types of wheat used. The spectral data obtained from the wheat images present a high degree of dimensionality due to the redundancy between continuous variables (wavelengths). Therefore, it is necessary to select a reduced set of wavelengths to optimize the processing. The iPLS-DA (Interval Partial Least Squares Discriminant Analysis) method allows selection of a reduced subset of wave intervals. Initially, the authors obtain 121 wavelengths, which are reduced to 92 in order to minimize the effect of the noise caused by the background. With the use of the iPLS-DA technique, this number is reduced to 12 wavelengths. Comparing the results obtained for the different grades, the best grading model was the grading obtained for vitreous grains.

2.3. Phenology and phenotyping

Phenology is the branch of ecology that studies the events that occur during the life cycle of the plant in reaction to the conditions of the environment (Fina, 1973). Temperature, light, and humidity are some of the examples of environmental conditions that can trigger reactions such as flowering and fruiting in plants. The stage of development of the plant, for example, is one of the attributes that, in most cases, is evaluated manually. This task, like grain inspection and disease assessment, is laborious and susceptible to human failure (Zhu et al., 2016). The application of a computer vision system, in this case, would offer a productive and non-invasive alternative to the manual observation work required in the process of plant phenotyping. 4.3.1.

Phenotyping framework using machine learning to evaluate the severity of stress in soybean plants Naik et al. (2017) present a real-time phenotyping framework using computer vision and machine learning to classify the severity of iron deficiency chlorosis in soybean plants. The workflow presented for the phenotyping consists of the following steps: (a) capture the image; (b) storage and curation; (c) extraction of phenotypic characteristics; (d) machine learning (classification); (e) model for use in decision support systems. In the study, ten approaches to classification are compared in order to select the best approach for use in a smartphone application. The images were obtained using a DSLR camera and calibrated using the X-Rite ColorChecker. In the pre-processing step, the white adjustment and the color calibration are performed to guarantee the uniformity of the collected images. In the segmentation step, the images are converted from RGB to HSV with the objective of efficient removal of the black background using the technique of thresholding. The noise and the remaining isolated points are eliminated using the component connection method. This method consists of detecting clusters of pixels that are connected to each other to identify the largest component. According to the protocol for the acquisition of images, the plant should be positioned in the center, so the removal of the unconnected components is simplified. The extraction of characteristics consists in calculating the percentage of yellow, corresponding to the regions of chlorosis, and the percentage of brown, corresponding to the regions of necrosis of the plant. In the classification stage, the authors compare ten models: decision trees,

random forests, naive Bayes, linear discriminant analysis, quadratic discriminant analysis, SVM, k-nearest neighbors and Gaussian mixture model. Accuracy and interpretability (end-user ability to interpret output data) were evaluated for the construction of a smartphone application that included both the processing and the classification of the images. The chosen method taking into account these aspects was the hierarchical model composed of two stages of classification by means of the SVM method.

2.3.1. Automatic method to determine wheat emergence and flowering stages

Sadeghi-Tehran et al. (2017) present an automated method to detect the flowering stage of wheat using a computer vision system. The method is not limited to specific wheat cultivars and therefore can be employed for a variety of cultivars without any adjustment necessary. The method is robust to handle lighting differences and natural lighting conditions in the field. It is robust, too, in the distinction of newly emerged ears, despite its similarity of color between leaves and ears. The technique is performed in four steps: (a) acquisition of image through a camera; (b) image pre-processing for contrast adjustment using the DS (Decorrelation Stretching) technique; (c) extraction of attributes; (d) classification of images. The DS method consists of widening the color differences and increasing the contrast of the image by removing the correlation between channels found in each pixel. It is possible, in this way, to distinguish the spikes from the leaves. The method lets you highlight details in images, such as

spikes, even when they are difficult for identification with the naked eye. In the attribute extraction step, the SIFT and BOV methods are used to generate the visual vocabulary of the image. The classifier adopted for the method is the SVM.

2.3.2. Automatic observation of wheat development in the field

Zhu et al. (2016) propose an automatic observation system for wheat spikelet development based on computer vision. Images are obtained under natural conditions with frequent changes of lighting directly from the field. To ensure that these are representative of the plot, a statistical analysis is performed. For the system to adapt to a complex environment, the detection mechanism of the proposed spike is formed by two steps: rustic and fine. The rustic detection step is to use the DS technique to highlight the regions of interest and an SVM classifier to find the regions containing the wheat ears. In the thin detection stage, for each region detected by the SVM classifier, DSIFT techniques are used to extract the attributes of the image and again to classify it using SVM. The FV technique (Fisher Vector) is used to optimize the attribute vector that will be used as input to the classification algorithm. The result is quite acceptable when compared to manual observations. The classification performed using two-step SVM was compared to other methods such as ExGExR (Excess Green - Excess Red) color index, saliency, multiple color, and k-Means. The method excels in the majority of cases. The ExGExR and saliency

methods are not suitable for the detection of wheat spikelets since they do not perform well into complex backgrounds.

2.3.3. Corn tassel characterization

Lu et al. (2015) present a computer vision system called mTassel for the purpose of characterizing the corn tassel using a computer vision system. This technique combines multiple views of attributes and color channels in order to reduce the influence of environmental variations. In addition to the detection of the total number of tassels, other characteristics such as tassel color, number of branches, length, width, perimeter and diameter are also obtained to allow monitoring over time. A large database (10 sequences with 16,031 samples) was used. The results of the work can be used for the detection of the stage of development, accurate estimation of production and dismantling by machines, as well as future research involving phenotyping. The images are captured hourly, between 9am and 4 pm, by a camera installed in the field. The ground truth is obtained by manually annotating the attributes of the corn tassel. The system consists of four modules: P, D, S and T. The first, module P, is responsible for detecting the potential regions that can hold the banners in the images. Module D is responsible for the accurate detection of the tassel in the set of regions previously determined. The module S extracts the tassel shape attributes. Finally, the T module estimates the shape parameters and number of banners. Mathematically, any color space can be viewed as a kind of linear or non-linear transformation of RGB space. Considering the fact that there is a margin of difference between

colors, the goal is to look for a method that can distinguish one color from another. Machine learning techniques are used to identify the linear projection that best distributes colors in a three-dimensional space. Thus, they can be used to convert RGB to a novel color space called SLC (Saliency Color Space). The colors that correspond to the tassel are improved, while the background colors are compressed and restricted. After the step of thresholding, the appearance of noise is common. Therefore, a filtering operation is normally used to reduce noise. Intuitively, the method can be seen with a “high pass” filter with a frequency threshold computed automatically. The unpredictable variation of the scene, for example, occlusion and specular reflection, may break the detection area of the tassel. However, a potential detection area must be continuous. Thus, the Euclidean distance transform is introduced to connect the separated areas and complete the proposed region. In module D, SVM classifiers are used for the detection of banners. From an image classified as being of a tassel, the module S extracts and delimits the shape of the tassel in the image. In this module again an SVM classifier is used to name the banding and background regions. The t module is detected and delimited, the T module extracts the attributes of color, number of branches, width, perimeter, diameter and number of banners. The results obtained by the method showed the superiority of the segmentation module when compared to the methods AP-HI (Yu et al., 2013), LCM (Teixidó et al., 2012) and HSeg (Tang et al., 2011).

2.3.4. Maize tassel segmentation based on the region-based color modeling method

Lu et al. (2016) present a method for segmentation of the maize tassel capable of processing different colors and, thus, enable its use in several cultivars. The approach adopted by the method uses the technique of segmentation based on graphs and the algorithm SLIC. The first has the effect of softening the limits of the regions while the second, SLIC, preserves the borders of the region. From these identified regions, the method proposes which image color modeling will be used by neural networks. This model is called NNI (Neural Network Intensity). Instead of training the classifier using the entire sample set, the model trains a neural network for each image intensity, in order to achieve greater robustness to the lighting modifications in the scene. The results demonstrate that the method achieves a favorable performance and that the approach used has sufficient flexibility and expandability to be applied in other cultures. The method overcomes the state of the art regarding the segmentation of the corn tassel. The NNI model, when compared to a traditional neural network, improves the overall performance of the method. The mTassel-S (Lu et al., 2015) method presented inferior performance when used with the test images.

2.3.5. Automatic characterization of rice flowering

Guo et al. (2015) present an automated system for the characterization of rice flowering dynamics using a series of RGB images acquired in the field. According to the authors, flowering (anthill of the spikelet)

is one of the most important phenotypic characteristics of rice and, consequently, considerable effort is expended by the researchers to observe its dynamics. Extrusion of the anthers lasts approximately one to two and a half hours daily during the breeding phase and the external characteristics of the environment are highly sensitive. The proposed method uses RGB, DSIFT, BOV and SVM images. The module installed in the field consists of a camera and microcontroller programmed to monitor the power, control the camera trigger and send the images to a server via Wi-Fi. The system initially monitors few samples due to its high cost. However, the method can be extended to be used on drones. Due to the size of the rice flower, image resolution affects the performance of the method. Low-resolution images have a negative impact on the accuracy of the method. The used SVM classifier obtained 83% accuracy when using 30 images for training and 64% accuracy when 300 images were used in contradiction to what was expected. Normally it is expected that when using a larger number of images for training a classifier this will perform better. One of the reasons that may explain the fact is that the complexity of the background generates high variation in the SIFT descriptors and, consequently, the more images for the training, the greater the impact on the accuracy. However, according to the authors, further studies still need to be done to determine the real cause of the problem.

2.3.6. Corn tassel detection using computer vision and SVM

Dismantling corn is a task that can be performed manually or with the help of machines. However, the success rate normally achieved by machines in this process ranges from 60% to 90%. Yet, when employed, there is a need for people to complete the process, as the desired success rate is 99%. The main problem in this scenario is that in corn plantations the height of the plant is not constant and, even in machines that use optical sensors, a more accurate discharge has not yet been reached. Kurtulmuş and Kavdir (2014) present a study to explore the possibility of determining the cutting position of the corn tassel in a plantation using computer vision. The method can be summarized in the following sequence of steps: (a) obtaining RGB images; (b) binarization of images using an SVM classifier; (c) application of morphological operations in the image; (d) construction of distance map; (e) identification of the potential position of the spikes. In binarization of the image, the SVM classifier used is trained to detect pixels belonging to the banners with the color information as input in the RGB, HSI and YCbCr spaces. The result of binarization consists of several connected parts and other unconnected parts belonging to both the tassel and regions of image noise. In this sense, morphological operations in the image are necessary to reduce the search regions and to extract the potential regions for tassel location. The result is non-uniform and uneven areas. The next step is to calculate the Euclidean distance of each pixel from the foreground to the nearest pixel of the background and thus obtain a distance map. In this phase of the algorithm, potential locations for the tassel include

false positives. To eliminate them, the SIFT and GLCM techniques are used to extract the shape and texture attributes respectively. The consolidation of these results allows obtaining a potential tassel location and potential cut position. cause of the problem.

3. Conclusion

According to the Food and Agriculture Organization of the United Nations, the world population will reach over 9 billion by 2050. Rapid population growth, shrinking farmland, dwindling natural resources, erratic climate changes, and shifting market demands are pushing the agricultural production system into a new paradigm. The new agricultural system must become more productive in output, efficient in operation, resilient to climate change, and sustainable for future generations. Artificial Intelligence (AI) holds promise in addressing the challenges of this new paradigm. The United States Department of Agriculture (USDA), Agricultural Research Service (ARS), is the premier agricultural research organization in the world with more than 2 000 scientists conducting agricultural research in more than 90 locations around the United States and in three foreign countries. ARS conducts research in areas such as crop production and protection, animal production and protection, natural resources and sustainable agriculture, as well as food nutrition and food safety. To harness the power of new technologies and transform agricultural research, ARS has established a virtual Center of Excellence (COE) to provide strategic leadership on the application of AI in agricultural research. The COE provides a platformto transfer knowledge, share lessons

learned, develop use cases, expand AI toolboxes, and continue to improve the technical capacity and talent pool within the ARS. This Special Section highlights the application of AI techniques in multiple areas of agricultural research so that readers can understand the range of AI-powered solutions within ARS. Agricultural Production Management—Agricultural production is a highly complex supply chain. AI is shifting the way our food is produced, distributed, and consumed. Researchers use AI-powered technologies to provide knowledge and guidance about crop rotation planning, planting times, water and nutrient management, pest management, disease control, optimal harvesting, food marketing, product distribution, food safety, and other agriculture-related tasks in the entire food supply chain. Peters et al. (Peters, et al., 2020) in "Harnessing AI to transform agriculture and inform agricultural research," provides an overview of current advances, challenges, and opportunities for AI technologies in agriculture. They illustrate the potential of AI using four major components of the food system: production; distribution, consumption, and uncertainty. They conclude that agricultural enterprises are prime for the use of AI and other technologies. Sudduth et al. (Sudduth, et al., 2020) in "AI down on the farm," review several case studies where machine learning (ML) has been used to model aspects of agricultural production systems and provide information useful for farm-level management decisions. These studies include providing information important for developing precise and efficient irrigation systems and enhancing tools used to recommend optimum levels of nitrogen fertilization for corn. _ Crop

Monitoring—Conventional crop health monitoring methods are labor-intensive and time-consuming. Utilizing AI is an efficient way to monitor and identify possible crop health issues or nutrient deficiencies in the soil. With the help of deep learning, applications are being developed to analyze plant health patterns in agriculture. Such AI-enabled applications are instrumental in understanding better, soil health, plant pests, and plant diseases. Ramos-Giraldo et al. in "Drought stress detection using low-cost computer vision system and machine learning techniques," developed a lowcost automated drought detection system using computer vision coupled with ML algorithms that documents the drought response in corn and soybeans field crops. _ Data Science—Farms produce a large number of data points on the ground daily. With the help of AI, farmers can now analyze a variety of drivers in real-time such as weather conditions, temperature, water usage or soil conditions collected from their farm to better inform their decisions. AI technologies enable farmers to take advantage of the data at their fingertips to grow healthy crops while using fewer natural resources. Peters et al. in "AI recommender system with ML for agricultural research," leveraged an AI recommender system (RS) with ML to maximize the use of data relevant to solving agricultural problems and to improve the efficiency of the scientific workforce while also improving the accuracy of estimates of the amount of food produced. They conclude that the RS provides a powerful approach to make use of the large amounts of data and scientific expertise in the agricultural enterprise to predict agroecosystem dynamics under changing environmental conditions. _ Disease Detection—Plant

diseases are a major threat to the environment, economy, and food security. Early detection of crop disease is essential for effective disease management. AI-based image recognition systems could recognize specific plant diseases with a high degree of accuracy, potentially paving the way for field-based crop-disease identification using mobile devices, such as smartphones. Bestelmeyer et al. (Bestelmeyer, et al., 2020) in "Scaling up agricultural research with artificial intelligence," developed AI-based tools that leverage site-based science and big data to help farmers and land managers make site-specific decisions. These tools provide early-warning of pest and disease outbreaks and facilitate the selection of sustainable cropland management practices. _ Food Quality—AI and machine vision are playing a key role in the world of food safety and quality assurance. AI makes it possible for computers to learn from experience, analyze data from both inputs and outputs, and perform most human tasks with an enhanced degree of precision and efficiency. Penning et al. (Penning, et al., 2020) in "Machine learning in the assessment of meat quality," employed ML to increase the speed and accuracy of carcass quality evaluation. They tested eight ML algorithms and achieved an impressive 81.5% to 99% accuracy in predicting carcass quality traits. _ Predictive Analytics—Remote sensing has been used to forecast the expected crop production and yield over a given area. It could also help to determine how much of the crop will be harvested under specific conditions. Advances in AI-based data analytics help farmers protect natural resources like land, air, and water, and reduce the amount of inputs needed for successful harvests. Hatfield et al.

(Hatfield, et al., 2020) in “Remote sensing: Advancing the science and the applications to transform agriculture,” developed tools using remote sensing coupled with neural networks and ML to identify variable areas within fields and determine the potential adaptive strategies to increase the profitability for each field while reducing the environmental impact through more efficient use of nutrients and pesticides. AI offers sweeping transformation with advanced approaches that will redefine the traditional pattern and limits of agriculture. AI will drive an agricultural revolution at a time when the world must produce more food using fewer resources. ARS scientists have applied AI technologies in various laboratories to advance agricultural research and speed up scientific discovery. Unfortunately, a lot of AI-based agricultural research projects in ARS could not be mentioned in this limited space. This Special Section has been prepared to make it as informative as possible with de tails of various AI techniques employed in ARS.

REFERENCES

1- Bannerjee, G., Sarkar, U., Das, S., Ghosh, I., 2018. Artificial Intelligence in Agriculture: A Literature Survey. International Journal of Scientific Research in Computer Science Applications and Management Studies. 7 (3), 1–6.

2- J. M. McKinion, H. E. Lemmon. "Expert systems for agriculture,"Computers and Electronics in Agriculture, vol. 1 no. 1, pp. 31-40, 1985.

3- A G. Boulanger, ―The expert system PLANT/CD: A case study in applying the general purpose inference system ADVISE to predicting black cutworm damage in corn, ‖ Ph.D. Thesis, University of Illinois at Urbana-Champaign, 1983.

4- J. Roach, R. Virkar, C. Drake, M. Weaver, "An expert system for helping apple growers," Computers and electronics in agriculture, vol. 2 no. 2, pp. 97-108, 1987.

5- N. D. Stone, T. W. Toman, "A dynamically linked expert-database system for decision support in Texas cotton production," Computers and electronics in agriculture, vol. 4 no. 2, pp. 139-148, 1989.

6- H. Lemmon, "Comax: an expert system for cotton crop management," Computer Science in Economics and Management, vol. 3 no. 2, pp. 177-185, 1990.

7- C. Robinson, N. Mort, "A neural network system for the protection of citrus crops from frost damage." Computers and Electronics in Agriculture, vol. 16 no. 3, pp. 177-187, 1997.

8- S. K. Li, X. M. Suo, Z. Y. Bai, Z. L. Qi, X. H. Liu, S. J. Gao, S. N. Zhao, "The machine recognition for population feature of wheat images based on BP neural network," Agricultural Sciences in China, vol.1 no. 8, pp. 885-889, 2002.

9- C. Prakash, A. S. Rathor, G. S. M. Thakur, "Fuzzy based Agriculture expert system for Soyabean." in Proc. International Conference on Computing Sciences WILKES100-ICCS2013, Jalandhar, Punjab, India. 2013.

10- G. M. Pasqual, J. Mansfield, "Development of a prototype expert system for identification and control of insect pests," Computers and Electronics in Agriculture, vol.2 no. 4, pp. 263-276, 1988.

11- W. D. Batchelor, R. W. McClendon, D. B. Adams, J. W. Jones, "Evaluation of SMARTSOY: An expert simulation system for insect pest management," Agricultural Systems, vol. 31 no. 1, pp. 67-81, 1989.

12- W. D. Batchelor, R. W. McClendon, M. E. Wetzstei, "Knowledge engineering approaches in developing expert simulation systems," Computers and electronics in agriculture, vol.7 no. 2, pp. 97-107, 1992.

13- M. Mozny, J. Krejci, I. Kott, "CORAC, hops protection management systems," Computers and electronics in agriculture, vol. 9 no. 2, pp. 103-110, 1993.

14- J. D. Knight, and M. E. Cammell, ―A decision support system for forecasting infestations of the black bean aphid, Aphis fabae Scop., on spring-sown field beans, Vicia faba.," Computers and electronics in agriculture, vol. 10 no. 3, pp. 269-279, 1994.

15- B. D. Mahaman, et al., "DIARES-IPM: a diagnostic advisory rulebased expert system for integrated pest management in Solanaceous crop systems." Agricultural Systems, vol. 76 no. 3, pp. 1119-1135, 2003.

16- M. Li, Y. Wang, L. Wang, Z. Yan, Q. Yu, ―EXPERT SYSTEM OF NON-POLLUTION FEICHENG PEACH PRODUCTION IN CHINA.‖ Computer and Computing Technologies in Agriculture, Vol.2, pp. 1371–1374, 2002.

17- A. K. Chakraborty, et al. "Expert System for Integrated Stress Management in Jute (Corchorus olitorius L. and C. capsularis L.)." International journal of Bio-resource and Stress Management, vol. 4 no. 2, pp. 192-200, 2013.

18- I. Ghosh, ―An Artificial Intelligence Technique for Jute Insect Pests Identification,‖ Int. J. of Adv. Research in Computer Science and Software Engineering, vol. 5 no. 11, pp.791-794, 2015.

19- H. S. Saini, R. Kamal, A. N. Sharma "Web based fuzzy expert system for integrated pest management in soybean," International Journal of Information Technology, vol. 8 no. 1, pp. 55-74, 2002.

20- F. Siraj, N. Arbaiy, "Integrated pest management system using fuzzy expert system," In Proc. KMICE-2006, University of Malayasia, Sintok. June, 2006.

21- M. Barros, R. Fernandes, "An approach via fuzzy systems for dynamics and control of the soybean aphid." In Proc. IFSA-EUSFLAT. 2015.

22- H. van der Werf, C. Zimmer, "An indicator of pesticide environmental impact based on a fuzzy expert system," Chemosphere, vol. 36 no. 10, pp. 2225-2249, 1998.

23- O. Roussel, A. Cavelier, H. van der Werf, "Adaptation and use of a fuzzy expert system to assess the environmental effect of pesticides applied to field crops," Agriculture, ecosystems & environment, vol. 80 no. 1, pp. 143-158, 2000.

24- Y. Shi, C. Zhang, A. Liang, H. Yuan, "Fuzzy control of the spraying medicine control system," In proc. International Conference on Computer and Computing Technologies in Agriculture. Springer, Boston, MA, 2007.

25- J. Jesus, T. Panagopoulos, A. Neves, "Fuzzy logic and geographic information systems for pest control in olive culture," In Proc. of the 4th WSEAS Int. Conf. on Energy, Environment, Ecosystems & Sustainable Development, 2008.

26- I. Ghosh and R. K. Samanta, "TEAPEST: An expert system for insect pest management in tea," Applied Engineering in Agriculture, vol. 19 no. 5, pp. 619, 2003.

27- R. K. Samanta, and Indrajit Ghosh. "Tea insect pests classification based on artificial neural networks." International Journal of Computer Engineering Science (IJCES), vol 2 no. 6, pp. 1-13, 2012.

28- G. Banerjee, U. Sarkar, I. Ghosh, ―A Radial Basis Function Network based classifier for Tea Pest Detection,‖ IJARCSSE, vol. 7 no. 5, pp. 665-669, 2017.

29- D. W. Boyd, M. K. Sun, "Prototyping an expert system for diagnosis of potato diseases," Computers and Electronics in Agriculture, vol. 10 no. 3, pp. 259-267, 1994.

30- S. K. Sarma, K. R. Singh, A. Singh, "An Expert System for diagnosis of diseases in Rice Plant." International Journal of Artificial Intelligence, vol.1 no.1, pp. 26-31, 2010.

31- K. Balleda, et al., "Agpest: An efficient rule-based expert system to prevent pest diseases of rice & wheat crops," in Proc. Intelligent Systems and Control (ISCO)-2014, IEEE, 2014.

32- V. Tilva, J. Patel, C. Bhatt, "Weather based plant diseases forecasting using fuzzy logic," In proc. (NUiCONE), 2013. IEEE, 2013.

33- L. J. Francl, and S. Panigrahi, "Artificial neural network models of wheat leaf wetness," Agricultural and Forest Meteorology, vol. 88 no. 1, pp. 57-65, 1997.

34- M. S. P. Babu, B. S. Rao, "Leaves recognition using back propagation neural network-advice for pest and disease control on crops." IndiaKisan. Net: Expert Advisory System (2007).

35- M. Ismail and Mustikasari, ―Intelligent system for tea leaf disease detection,‖ IPSJ Technical report, pp. 1-4, 2013.

36- B. C. Karmokar, et al., "Tea leaf diseases recognition using neural network ensemble," International Journal of Computer Applications, vol. 114 no.17, pp. 27-30, 2015.

37- S. Sladojevic, et al. "Deep neural networks based recognition of plant diseases by leaf image classification," Computational intelligence and neuroscience, 2016.

38- A. M. G. J. Hanson, A. Joy, J. Francis, ―Plant LeafDisease Detection using Deep Learning and Convolutional Neural Network,‖ International Journal of Engineering Science, vol. 7 no. 3, pp. 5324- 5328, 2017.

39- F. Hahn, I. Lopez, G. Hernandez, "Spectral detection and neural network discrimination of Rhizopus stolonifer spores on red tomatoes," Biosystems Engineering, vol. 89 no. 1, pp. 93-99, 2004.

40- K. Y. Huang "Application of artificial neural network for detecting Phalaenopsis seedling diseases using color and texture features," Computers and Electronics in agriculture, vol.57 no. 1, pp. 3-11, 2007.

41- S. S. Sannakki, et al. "Leaf disease grading by machine vision and fuzzy logic," Int. J. of Comp. Tech. and Application, vol. 2 no. 5, pp. 1709-1716, 2011.

42- H. Al-Hiary, et al., "Fast and accurate detection and classification of plant diseases," Int. J. of Computer Application, vol. 17 no. 1, pp. 31- 38, 2011.

43- D. Al Bashish, M. Braik, S. Bani-Ahmad, "Detection and classification of leaf diseases using K-means-based segmentation and Neuralnetworks-based classification," Information Technology Journal, vol. 10 no.2, pp. 267-275, 2011.

44- S. F. Khan, et al., "Dr. Wheat: a Web-based expert system for diagnosis of diseases and pests in Pakistani wheat." In Proc. of the World Congress on Engineering. Vol. 1. 2008.

45- I. Kavdir, and Daniel E. Guyer, "Apple grading using fuzzy logic," Turkish Journal of Agriculture and Forestry, vol. 27 no.6, pp. 375-382, 2004.

46- K. Gottschalk, László Nagy, and István Farkas, "Improved climate control for potato stores by fuzzy controllers," Computers and electronics in agriculture, vol. 40 no. 1, pp. 127-140, 2003.

47- C. Escobar, and José Galindo, "Fuzzy control in agriculture: simulation software." In Proc. INDUSTRIAL SIMULATION CONFERENCES 2004, pp. 45-49, 2004.

48- M. Taki, et al., ―Application of Neural Networks and multiple regression models in greenhouse climate estimation,‖ Agricultural Engineering International: CIGR Journal, vol. 18 no. 3, pp.29-43, 2016.

49- Q. Yang, "Classification of apple surface features using machine vision and neural networks," Computers and Electronics in Agriculture, vol. 9 no.1, pp. 1-12, 1993.

50- K. Nakano, "Application of neural networks to the color grading of apples," Computers and electronics in agriculture, vol. 18 no.2, pp. 105-116, 1997.

51- G. Capizzi, et al., "A Novel Neural Networks-Based Texture Image Processing Algorithm for Orange Defects Classification," International Journal of Computer Science & Applications, vol. 13 no. 2, pp. 45-60, 2016.

52- R. Badia-Melis, et al. "Artificial neural networks and thermal image for temperature prediction in apples," Food and Bioprocess Technology, vol. 9 no.7, pp. 1089-1099, 2016.

53- A. Castañeda-Miranda and Víctor M. Castaño, "Smart frost control in greenhouses by neural networks models," Computers and Electronics in Agriculture, vol. 137, pp. 102-114, 2017.

54- J. A. Hernandez-Perez, et al. "Neural networks for the heat and mass transfer prediction during drying of cassava and mango," Innovative Food Science & Emerging Technologies, vol. 5 no.1, pp. 57-64, 2004.

55- I. A. Martynenko, and Simon X. Yang, "Biologically inspired neural computation for ginseng drying rate," Biosystems engineering, vol. 95 no.3, pp. 385-396, 2006.

56- K. Movagharnejad, and Maryam Nikzad, "Modeling of tomato drying using artificial neural network," Computers and electronics in agriculture, vol. 59 no.1, pp. 78-85, 2007.

57- N. B. Khazaei, et al., "Applied machine vision and artificial neural network for modeling and controlling of the grape drying process." Computers and electronics in agriculture, vol. 98, pp. 205-213, 2013.

58- Andrew Higgins, et al., "Forecasting maturity of green peas: An application of neural networks," Computers and electronics in agriculture, vol. 70 no.1, pp. 151-156, 2010.

59- F. Cheng, F. N. Chen, and Y. B. Ying, "Image recognition of unsound wheat using artificial neural network," in Proc. Second WRI Global Congress on Intelligent Systems (GCIS), 2010, Vol. 3. IEEE, 2010.

60- P. Boniecki, Krzysztof Nowakowski, and R. Tomczak, "Neuralnetworks type MLP in the process of identification chosen varieties of maize," in Proc. Third International Conference on Digital Image Processing (ICDIP 2011), Vol. 8009. International Society for Optics and Photonics, 2011.

61- V. F. Bralts, et al., "An expert system for the hydraulic analysis of microirrigation systems," Computers and electronics in agriculture, vol. 9 no. 4, pp. 275-287, 1993.

62- R. S. Sicat, Emmanuel John M. Carranza, and Uday Bhaskar Nidumolu, "Fuzzy modeling of farmers' knowledge for land suitability classification," Agricultural systems, vol. 83 no.1, pp. 49-75, 2005.

63- Y. Si, G. Liu, J. Lin, Q. Lv and F. Juan, ―Design of Control System of Laser Leveling Machine Based on Fuzzy Control Theory,‖ In Proc. International Conference on Computer and Computing Technologies in Agriculture (pp. 1121-1127). Springer, Boston, MA.

64- N. Tremblay, et al., "Development and validation of fuzzy logic inference to determine optimum rates of N for corn on the basis of field and crop features," Precision Agriculture, vol. 11 no. 6, pp. 621-635, 2010.

65- M. Valdés-Vela, et al., "Soft computing applied to stem water potential estimation: A fuzzy rule based approach," Computers and Electronics in Agriculture, vol. 115, pp. 150-160, 2015.

66- C. Arif, M. Mizoguchi, and B. I. Setiawan, ―Estimation of soil moisture in paddy field using Artificial Neural Networks,‖ arXiv preprint arXiv: 1303.1868, 2013.

67- Israel Broner and Carlton R. Comstock, "Combining expert systems and neural networks for learning site-specific conditions," Computers and electronics in agriculture, vol. 19 no.1, pp. 37-53, 1997.

68- H. Song and Yong He, "Crop nutrition diagnosis expert system based on artificial neural networks," in Proc. Third International Conference on Information Technology and Applications, 2005. ICITA 2005. Vol. 1. IEEE, 2005.

69- Y. Zhai, et al. "Soil texture classification with artificial neural networks operating on remote sensing data," Computers and Electronics in Agriculture, vol. 54 no. 2, pp. 53-68, 2006.

70- S. S. Patil, et al., "Web based expert system for diagnosis of micro nutrients deficiencies in crops," in Proceedings of the World Congress on Engineering and Computer Science. Vol. 1. 2009.

71- A. C. Hinnell, et al., "Neuro-Drip: estimation of subsurface wetting patterns for drip irrigation using neural networks," Irrigation science, vol. 28 no.6, pp. 535-544, 2010.

72- J. da Silva, et al., "Comparison of mapping soybean areas in Brazil through perceptron neural networks and vegetation indices," African Journal of Agricultural Research, vol.11 no.43, pp. 4413-4424, 2016.

73- V. Z. Antonopoulos, and A. V. Antonopoulos, ―Daily reference evapotranspiration estimates by artificial neural networks technique and empirical equations using limited input climate variables,‖ Computers and Electronics in Agriculture, vol. 132, pp. 86-96, 2017.

74- A. H. Manek, and P. K. Singh, ―Comparative study of neural network architectures for rainfall prediction,‖ In proc. Technological Innovations in ICT for Agriculture and Rural Development (TIAR), 2016, pp. 171-174, 2016, July, IEEE.

75- G. M. Pasqual, "Development of an expert system for the identification and control of weeds in wheat, triticale, barley and oat crops," Computers and electronics in agriculture, vol. 10 no. 2, pp. 117-134, 1994.

76- T. F. Burks, et al., "Backpropagation neural network design and evaluation for classifying weed species using color image texture," Transactions of the ASAE, vol. 43 no. 4, pp. 1029-1037, 2000.

77- T. F. Burks, et al., "Evaluation of neural-network classifiers for weed species discrimination," Biosystems Engineering, vol. 91 no.3, pp. 293- 304, 2005.

78- Y. Shi, H. Yuan, A. Liang, and C. Zhang, ―Analysis and Testing of Weed Real-time Identification Based on Neural Network,‖ In Proc. International Conference on Computer and Computing Technologies in Agriculture (pp. 1095-1101). Springer, Boston, MA, 2007.

79- P. R. Eddy, et al., "Hybrid segmentation–artificial neural network classification of high resolution hyperspectral imagery for site-specific herbicide management in agriculture," Photogrammetric Engineering & Remote Sensing, vol. 74 no.10, pp. 1249-1257, 2008.

80- O. Barrero, et al., "Weed detection in rice fields using aerial images and neural networks," in proc. Symposium on Signal Processing, Images and Artificial Vision (STSIVA), 2016 XXI. IEEE, 2016.

81- Barbedo, J.G.A., 2016. A review on the main challenges in automatic plant disease identification based on visible range images. Biosyst. Eng. 144, 52–60. https://doi. org/10.1016/j.biosystemseng.2016.01.017.

82- Chung, C.-L., Huang, K.-J., Chen, S.-Y., Lai, M.-H., Chen, Y.-C., Kuo, Y.-F., 2016. Detecting Bakanae disease in rice seedlings by machine vision. Comput. Electron. Agric. 121, 404–411. https://doi.org/10.1016/j.compag.2016.01.008.

83- Shrivastava, S., Singh, S.K., Hooda, D.S., 2016. Soybean plant foliar disease detection using image retrieval approaches. Multimedia Tools Appl. 1–28. https://doi.org/10. 1007/s11042-016-4191-7.

84- Liu, T., Chen, W., Wu, W., Sun, C., Guo, W., Zhu, X., 2016. Detection of aphids in wheat fields using a computer vision technique. Biosyst. Eng. 141, 82–93. https://doi.org/ 10.1016/j.biosystemseng.2015.11.005.

85- Pires, R.D.L., Gonçalves, D.N., Oruê, J.P.M., Kanashiro, W.E.S., Rodrigues Jr., J.F., Machado, B.B., Gonçalves, W.N., 2016. Local descriptors for soybean disease recognition. Comput. Electron. Agric. 125, 48–55. https://doi.org/10.1016/j.compag. 2016.04.032.

86- Han, L., Haleem, M.S., Taylor, M., 2015. A novel computer vision-based approach to automatic detection and severity assessment of crop diseases. In: 2015 Science and Information Conference (SAI), pp. 638–644. doi:https://doi.org/10.1109/SAI.2015. 7237209.

87- Boniecki, P., Piekarska-Boniecka, H., Świerczyński, K., Koszela, K., Zaborowicz, M., Przybył, J., 2014. Detection of the granary weevil based on x-ray images of damaged wheat kernels. J. Stored Prod. Res. 56, 38–42. https://doi.org/10.1016/j.jspr.2013. 11.001.

88- Serranti, S., Cesare, D., Bonifazi, G., 2013. The development of a hyperspectral imaging method for the detection of Fusarium-damaged, yellow berry and

vitreous Italian durum wheat kernels. Biosyst. Eng. 115 (1), 20–30. https://doi.org/10.1016/j. biosystemseng.2013.01.011.

89- Singh, K.R., Chaudhury, S., 2016. Efficient technique for rice grain classification using back-propagation neural network and wavelet decomposition. IET Comput. Vision 10 (8), 780–787. https://doi.org/10.1049/iet-cvi.2015.0486.

90- Sabanci, K., Kayabasi, A., Toktas, A., 2017. Computer vision-based method for classification of wheat grains using artificial neural network. J. Sci. Food Agric. 97 (8), 2588–2593. https://doi.org/10.1002/jsfa.8080.

91- Sun, K., Wang, Z., Tu, K., Wang, S., Pan, L., 2016. Recognition of mould colony on unhulled paddy based on computer vision using conventional machine-learning anddeep learning techniques. Sci. Rep. 6, 37994. https://doi.org/10.1038/srep37994.

92- Shrestha, B.L., Kang, Y.-M., Yu, D., Baik, O.-D., 2016. A two-camera machine vision approach to separating and identifying laboratory sprouted wheat kernels. Biosyst. Eng. 147, 265–273. https://doi.org/10.1016/ j.biosystemseng.2016.04.008.

93- Olgun, M., Onarcan, A.O., Ö-zkan, K., Işik, Şahin, Sezer, O., Ö-zgişi, K., Ayter, N.G., Başçiftçi, Z.B., Ardiç, M., Koyuncu, O., 2016. Wheat grain classification by using dense sift features with svm classifier. Comput. Electron. Agric. 122, 185–190. https://doi.org/10.1016/j.compag. 2016.01.033.

94- Zareiforoush, H., Minaei, S., Alizadeh, M.R., Banakar, A., 2015. A hybrid intelligent approach based on computer vision and fuzzy logic for quality measurement of milled rice. Measurement 66, 26–34. https://doi.org/10.1016/j.measurement.2015.01.022.

95- Kezhu, T., Yuhua, C., Weixian, S., Xiaoda, C., 2014. Identification of diseases for soybean seeds by computer vision applying BP neural network. Int. J. Agric. Biol. Eng. 7 (3), 43–50. https://doi.org/10.3965/ijabe.v7i3.1028.

96- Ebrahimi, E., Mollazade, K., Babaei, S., 2014. Toward an automatic wheat purity measuring device: a machine vision-based neural networks-assisted

imperialist competitive algorithm approach. Measurement 55, 196–205. https://doi.org/10.1016/j. measurement.2014.05.003.

97- Fina, A.L.d., 1973. Climatologia y fenologia agricolas. first ed., EUDEBA. Food, 2012. A.O. of the United Nations, Faostat database. <http://www.fao.org/ faostat>.

98- Zhu, Y., Cao, Z., Lu, H., Li, Y., Xiao, Y., 2016. In-field automatic observation of wheat heading stage using computer vision. Biosyst. Eng. 143, 28–41. https://doi.org/10. 1016/j.biosystemseng.2015.12.015.

99- Naik, H.S., Zhang, J., Lofquist, A., Assefa, T., Sarkar, S., Ackerman, D., Singh, A., Singh, A.K., Ganapathysubramanian, B., 2017. A real-time phenotyping framework using machine learning for plant stress severity rating in soybean. Plant Meth. 13 (1), 23. https://doi.org/10.1186/s13007-017-0173-7.

100- Sadeghi-Tehran, P., Sabermanesh, K., Virlet, N., Hawkesford, M.J., 2017. Automated method to determine two critical growth stages of wheat: heading and flowering. Front. Plant Sci. 8https://doi.org/10.3389/ fpls.2017.00252.

101- Lu, H., Cao, Z., Xiao, Y., Fang, Z., Zhu, Y., Xian, K., 2015. Fine-grained maize tassel trait characterization with multi-view representations. Comput. Electron. Agric. 118, 143–158. https://doi.org/10.1016/j.compag. 2015.08.027.

102- Yu, Z., Cao, Z., Wu, X., Bai, X., Qin, Y., Zhuo, W., Xiao, Y., Zhang, X., Xue, H., 2013. Automatic image-based detection technology for two critical growth stages of maize: emergence and three-leaf stage. Agric. For. Meteorol. 174, 65–84. https://doi.org/10. 1016/j.agrformet.2013.02.011.

103- Teixidó, M., Font, D., Pallejà, T., Tresanchez, M., Nogués, M., Palacín, J., 2012. Definition of linear color models in the rgb vector color space to detect red peaches in orchard images taken under natural illumination. Sensors 12 (6), 7701–7718. https://doi. org/10.3390/s120607701.

104- Tang, W., Zhang, Y., Zhang, D., Yang, W., Li, M., 2011. Corn tassel detection based on image processing. In: International Workshop on Image

Processing and Optical Engineering, Vol. 8335. doi:https://doi.org /10.1117/12.917672.

105- Lu, H., Cao, Z., Xiao, Y., Li, Y., Zhu, Y., 2016. Region-based colour modelling for joint crop and maize tassel segmentation. Biosyst. Eng. 147, 139–150. https://doi.org/10. 1016/j.biosystemseng.2016.04.007.

106- Guo, W., Fukatsu, T., Ninomiya, S., 2015. Automated characterization of flowering dynamics in rice using field-acquired time-series RGB images. Plant Meth. 11 (1). https://doi.org/10.1186/s13007-015-0047-9.

107- Kurtulmuş, F., Kavdir, İ., 2014. Detecting corn tassels using computer vision and support vector machines. Expert Syst. Appl. 41 (16), 7390–7397. https://doi.org/10.1016/j. eswa.2014.06.013.

108- Romualdo, L.M., Luz, P.H.C., Devechio, F.F.S., Marin, M.A., Zúñiga, A.M.G., Bruno, O.M.,

109-Herling, V.R., 2014. Use of artificial vision techniques for diagnostic of nitrogen nutritional status in maize plants. Comput. Electron. Agric. 104, 63–70. https://doi. org/10.1016/j.compag.2014.03.009.

110- Coates, A., Baumstarck, P., Le, Q., Ng, A.Y., Scalable learning for object detection with GPU hardware. In: 2009 IEEE/RSJ International Conference on Intelligent Robots and Systems, IEEE, pp. 4287–4293. doi:https://doi.org/10.1109/IROS.2009.5354084.

111- Lee, S.H., Chan, C.S., Wilkin, P., Remagnino, P., 2015. Deep-plant: Plant identification with convolutional neural networks. In: 2015 IEEE International Conference on Image Processing (ICIP). IEEE, pp. 452–456. https://doi.org/10.1109/ICIP.2015. 7350839.

112- Lu, J., Hu, J., Zhao, G., Mei, F., Zhang, C., 2017. An in-field automatic wheat disease diagnosis system. Comput. Electron. Agric. 142, 369–379. https://doi.org/10.1016/ J.COMPAG.2017.09.012.

113- Ferentinos, K.P., 2018. Deep learning models for plant disease detection and diagnosis. Comput. Electron. Agric. 145, 311–318. https://doi.org/ 10.1016/J.COMPAG.2018. 01.009.

114- Kosov, S., Shirahama, K., Li, C., Grzegorzek, M., 2018. Environmental microorganism classification using conditional random fields and deep convolutional neural networks. Pattern Recogn. 77, 248–261. https://doi.org/10.1016/J.PATCOG.2017.12. 021.

115- Shen, Y., Zhou, H., Li, J., Jian, F., Jayas, D.S., 2018. Detection of stored-grain insects using deep learning. Comput. Electron. Agric. 145, 319–325. https://doi.org/10. 1016/J.COMPAG.2017.11.039.

116- Hulasare, R., Dronzek, B., Jayas, D., 2003. Grain-Grading Systems. CRC Presshttps://doi. org/10.1201/9780203911310.ch3.

117- Act 1991, 1991. International convention for the protection of new varieties of plants. <http://www.upov.int/upovlex/en/conventions/1991/act1991.html>.

118- Peters, D. P., Rivers, A., Hatfield, J. L., Lemay, D. G., Liu, S., & Basso, B. (2020). Harnessing AI to transform agriculture and inform agricultural research. IT Professional, 22(3), 16-21.

119- Sudduth, K. A., Woodward-Greene, M. J., Penning, B. W., Locke, M. A., Rivers, A. R., & Veum, K. S. (2020). AI down on the farm. IT Professional, 22(3), 22-26.

120- Bestelmeyer, B. T., Marcillo, G., McCord, S. E., Mirsky, S., Moglen, G., Neven, L. G., ... & Wakie, T. (2020). Scaling up agricultural research with artificial intelligence. IT Professional, 22(3), 33-38.

121- Penning, B. W., Snelling, W. M., & Woodward-Greene, M. J. (2020). Machine learning in the assessment of meat quality. IT Professional, 22(3), 39-41.

122- Hatfield, J. L., Cryder, M., & Basso, B. (2020). Remote sensing: advancing the science and the applications to transform agriculture. IT Professional, 22(3), 42-45.

(Peters, et al., 2020)

CHAPTER 2

ARTIFICIAL INTELLIGENCE FOR POWER AND FREQUENCY VARIATION CONTROL

Ashish Dhamanda[1]

[1] Gurukula Kangri Deemed to be University Haridwar, UK, India
dhamanda_ashish@yahoo.co.in .dhamandaashish@gmail.com
https://orcid.org/0000-0002-7481-5267

1. INTRODUCTION

In recent years, major changes have been introduced into the structure of electric power utilities all around the world. If the load increases, the generated power must increase, thus steam valves must open wider. If the load decreases, generation must also decrease, and this requires valve openings to be smaller. The way we sense the power imbalance is through its effect on generator speeds and/or frequency. Thus, if there is excess generation, the generator sets will tend to speed up and the frequency will rise. If there is a deficiency of generation, the generator speeds and frequency will drop. These deviations from nominal speed and/or frequency are used as control signals to cause appropriate valve action automatically. The control function in this case is provided by the governor mechanism. This is referred to as primary control.

The system consists of the components; Fly ball speed governor, Hydraulic amplifier, Linkage mechanism, Speed changer.

2. THERMAL SYSTEM

A large portion of the conversion of thermal to electrical energy occurs in steam turbines. This has many advantages like, the balanced construction, relatively high efficiency, few moving parts, ease of maintenance, and availability in large sizes. Internally, the steam turbine consists of rows of blades designed to extract the heat and pressure energy of the steam, which is usually superheated, and convert this

energy into mechanical energy. To accomplish this goal, high-pressure steam is admitted through a set of control valves and allowed to expand as it passes through the turbine, to be exhausted, usually to a condenser, at relatively low pressure and temperature. In the reheat turbines the steam exhausted from the HP (high-pressure) turbine is returned to the boiler in order to increase its thermal energy before it is introduced into the intermediate-pressure (IP) turbine. This reheat steam is usually heated to its initial temperature, but at a pressure that is somewhat reduced from the HP steam condition. Following the reheater, the steam encounters two valves before it enters the IP turbine. One of these is the reheat stop valve and serves the function of shutting off the steam supply to the IP turbine in the event the unit experiences shut-down, such as in an over speed trip operation. The second valve, the intercept valve, shuts off the steam to the IP turbine in case of loss of load, in order to prevent over speeding. It is actuated by the governor, whereas the reheat stop valve is actuated by the over speed trip mechanism. The IP turbine is similar to the HP turbine except that it has longer blades to permit passage of a greater volume of steam. Extraction points are again provided to bleed off spent steam to feed water heaters. In many turbines, the steam flow is divided into two or more sets of low-pressure (reaction) turbines. In some designs, the steam is reheated between stages to create a reheat cycle which increases the overall efficiency.

For controlling the frequency and power in the limit some computational technique like; traditional (PI, PID), artificial

intelligence (Fuzzy Technique) has been applied. Simulink transfer function model of two and three generating unit has been obtained, shown in Figure 1 and Figure 2. [1], [5], [6], [7], [8], [9], [10], [11], [12], [14].

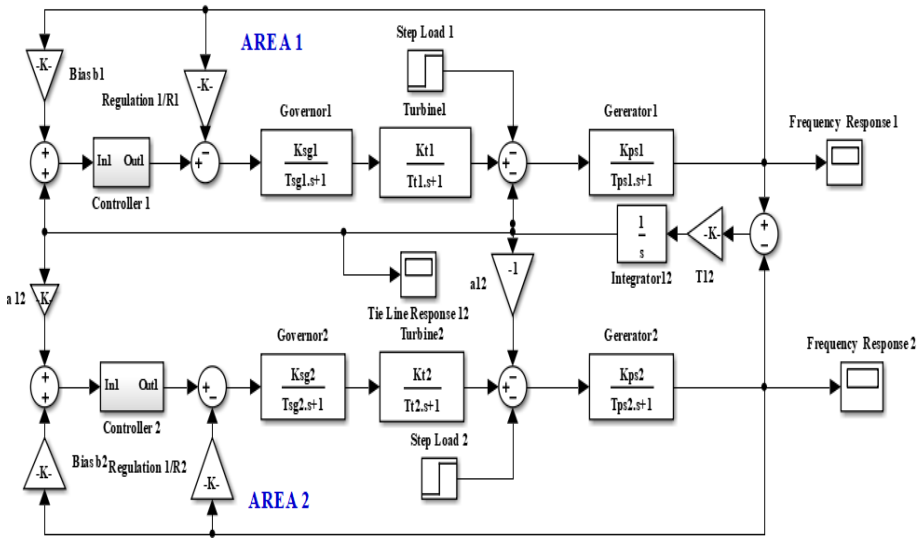

Figure 1 Transfer function model of two generating unit

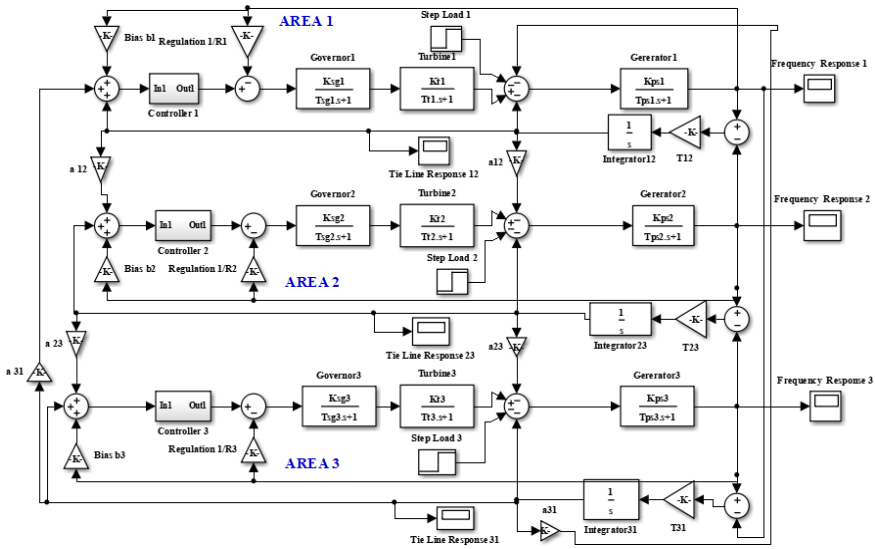

Figure 2 Transfer function model of three generating unit

3. MATHEMATICAL EQUATION

The mathematical equation can be written which is based on small deviations around a nominal steady state. Let us assume that the steam is operating under steady state and is delivering power P_G from the generator at nominal speed or frequency *f*. Under this condition, the transfer functions equation of the governor, turbine, generator has been obtained and shown below;

$$\text{Governor Transfer function} = \frac{Ksg}{Tsg\ s+1} \tag{1}$$

Where K_{sg} is the gain of governor and T_{sg} is the time constant of governor.

$$\text{Turbine Transfer function} = \frac{Kt}{Tt\ s+1} \tag{2}$$

Where K_t is the gain of turbine and T_t is the time constant of turbine.

$$\text{Generator Transfer Function} = \frac{Kps}{Tps\ s+1} \tag{3}$$

Where K_{ps} is the gain of generator and T_{ps} is the time constant of generator, normally range of T_{ps} is 20s. $K_{ps} = \frac{1}{B}$, B is constant parameter in MW/Hz. $T_{ps} = \frac{2H}{Bf_0}$, H be the inertia constant of a generator (MW-s/MVA) and P_r the rating of the turbo-generator (MVA). f_o is frequency. [2], [3], [4], [14]

3.1 STATIC ANALYSIS OF TWO AREA SYSTEM

In two area system the changes or deviations, which result in the frequency and tie-line power under steady state conditions following sudden step changes in the loads in the two areas, are determined.

Let ΔP_{D1}, ΔP_{D1}, be sudden (incremental) step changes in the loads of control area-1 and control area-2, simultaneously. ΔP_{G1}, ΔP_{G2} are the incremental changes in the generation in area-1 and area-2 as a result of the load changes. Δf is the static change in frequency. This will be the same for both the areas and ΔP_{TL}. Is the static change in the tie-line power transmitted from area-1 to area-2. Since only the static changes are being determined, the incremental changes in generation can be determined by the static loop gains. So, we have the frequency

$$\Delta f = \frac{\Delta P_{D1} + a_{12}\Delta P_{D2}}{\left[B_2 + \frac{1}{R_2}\right] + a_{12}\left[B_1 + \frac{1}{R_1}\right]} \tag{4}$$

$$\Delta P_{TL1} = \frac{\left[B_1 + \frac{1}{R_1}\right]\Delta P_{D2} - \left[B_2 + \frac{1}{R_2}\right]\Delta P_{D1}}{\left[B_2 + \frac{1}{R_2}\right] + a_{12}\left[B_1 + \frac{1}{R_1}\right]} \tag{5}$$

Equation (4) and (5) are modified as

Tie-line frequency,

$$\Delta f = \frac{\Delta P_{D1} + a_{12}\Delta P_{D2}}{\left[B_2 + \frac{1}{R_2}\right] + a_{12}\left[B_1 + \frac{1}{R_1}\right]} \quad (6)$$

Tie-line power

$$P_{TL1} = \frac{\left[B_1 + \frac{1}{R_1}\right]\Delta P_{D2} - \left[B_2 + \frac{1}{R_2}\right]\Delta P_{D1}}{\left[B_2 + \frac{1}{R_2}\right] + a_{12}\left[B_1 + \frac{1}{R_1}\right]} \quad (7)$$

Where $\beta_1 = \left[B_1 + \frac{1}{R_1}\right]$

$\beta_2 = \left[B_2 + \frac{1}{R_2}\right]$

Equation (6) and (7) give the values of the static changes in frequency and tie-line power, respectively, as a result of sudden changes in the two areas.

3.2 DYNAMIC ANALYSIS OF TWO AREA SYSTEM

To describe the dynamic response of the two area system as shown in figure 1, a system of seventh order differential equation is required. The solution of these equations would be tedious. However, some important characteristic can be brought out by an analysis rendered simple by the following assumptions. A power system of two identical control areas is considered for the analysis:

(i) $T_{sg} = T_t = 0$ for both the areas.

(ii) The damping constants of two areas are neglected,

i.e., $B_1 = B_2 = 0$

The frequency for area 1 and area 2 are as follows:

$$\Delta F_1(s) = \frac{f_0}{2H_1(s)}[\Delta P_{G1}(s) - \Delta P_{D1}(s) - \Delta P_{TL1}(s)] \quad (8)$$

$$\Delta F_2(s)=\frac{f_0}{2H_2\,(s)}[\Delta P_{G2}(s)-\Delta P_{D2}(s)-\ \Delta P_{TL2}\ (s)] \tag{9}$$

$$\Delta P_{TL1}(s)=\frac{\Delta P_{D2}-\Delta P_{D1}}{s^2+\left[\frac{f_0}{2RH}\right]s+\left[\frac{2\pi f_0 T_{12}}{H}\right]}\ \ \frac{\pi f_0 T_{12}}{H} \tag{10}$$

The equation 8, 9, 10 shows the frequencies of area 1 and area 2 with tie-line power of interconnected power system.

3.3 AREA CONTROL ERROR IN TWO AREA

ACE is the combination of the variation in power and frequency. Thus, for control area-1 we have

$$ACE_1 = \Delta P_{TL1} + b_1 \Delta f_1 \tag{11}$$

Where b_1 = constant = area frequency bias. After Taking Laplace transform on both sides of equation (11), we get

$$ACE_1(s)=\Delta P_{TL1}(s)+ b_1 \Delta F_1(s) \tag{12}$$

Similarly, for control area-2, we have

$$ACE_2(s)=\Delta P_{TL2}(s)+ b_2 \Delta F_2(s) \tag{13}$$

3.4 TIE-LINE BIAS CONTROL

The speed changer equation

$$\Delta P_{C1}=-K_{I1}\int(\Delta P_{TL1} + b_1 \Delta f_1) \tag{14}$$

$$\Delta P_{C2}=-K_{I2}\int(\Delta P_{TL2} + b_2 \Delta f_2) \tag{15}$$

The constants K_{I1}, K_{I2}, are the gains of the integrators. if the ACE is negative, then the area should increase its generation. So, the right hand side terms of equation (14) and (15) are assigned a negative sign.

3.5 THREE AREA POWER SYSTEM

In three area power system consists of equal area and size of generating units. Figure 2 shows the three area system. Thermal plant has a non-reheat and single stage reheat turbine. The value of either non-reheat or reheat turbine has been taken different from the other ones, and each area is connected through tie-line.

ACE in the system for three areas ACE_1, ACE_2, ACE_3 are made linear combination of frequency and tie-line power error.

$$ACE_1(s) = \Delta P_{TL1}(s) + b_1 \Delta F_1(s) \quad (16)$$

$$ACE_2(s) = \Delta P_{TL2}(s) + b_2 \Delta F_2(s) \quad (17)$$

$$ACE_3(s) = \Delta P_{TL3}(s) + b_3 \Delta F_3(s) \quad (18)$$

Where b_1, b_2, b_3 are constants, and also called area frequency bias of area1, area2 and area3.

For applying integral control of ACE_1, ACE_2, ACE_3

$$\Delta P_{C1} = -K_{I1} \int (\Delta P_{TL1} + b_1 \Delta f_1) \quad (19)$$

$$\Delta P_{C2} = -K_{I2} \int (\Delta P_{TL2} + b_2 \Delta f_2) \quad (20)$$

$$\Delta P_{C3} = -K_{I3} \int (\Delta P_{TL3} + b_3 \Delta f_3) \quad (21)$$

Three area non-reheat (N-R) thermal generating unit for automatic generation control are shown in figure 2.

4. TECHNIQUES APPLIED

Three types of computational techniques, PI, PID and Artificial intelligence (Fuzzy) technique used to control the limit of frequency and power.

4.1 PI And PID (TRADITIONAL TECHNIQUE)

Different types of technique are using from past year for controlling the frequency and power flow in interconnected power system. PI (Proportional Plus Integral) and PID (Proportional Plus Integral Plus Derivative) techniques are the traditional technique.

The transfer function of the PI controller is

$$G(s) = Kp + \frac{Ki}{s} \tag{22}$$

Where K_p is proportional gain and Ki is an integral gain.

The transfer function of the PID controller is

$$G(s) = Kp + \frac{ki}{s} + sKd \tag{23}$$

Where K_p is proportional gain, Ki is an integral gain and K_d is derivative gain.

4.2 ARTIFICIAL INTELLIGENCE (FUZZY TECHNIQUE)

Fuzzy logic is an innovative technology that enhances conventional system design with engineering expertise. It was first proposed by Lotfi Zadeh in 1965. The use of fuzzy logic can help to circumvent the

need for rigorous mathematical modeling. Fuzzy logic controller is shown below in figure 3.

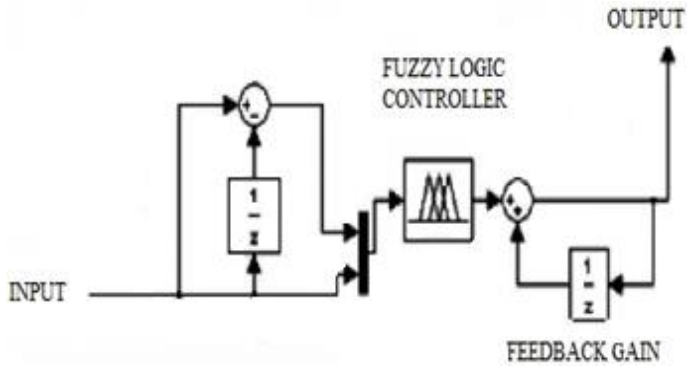

Figure 3 Fuzzy logic control scheme model

In this fuzzy system having 9 membership functions, which makes 81(9x9) rule.

5. RESULTS

Two and three generating unit model has been obtained and simulated by the MATLAB Simulink software to minimize the variation of power and frequency of thermal generation. In this simulation, different computational techniques (Traditional, Artificial intelligence technique) has been used for obtaining the comparative dynamic response and results has been tabulated in Table 1 and Table 2.

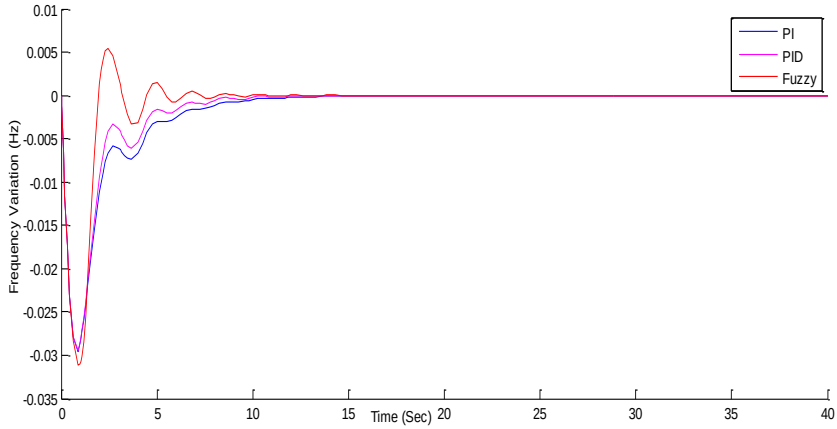

Figure 4 Frequency Variation Response of Two Generating Unit

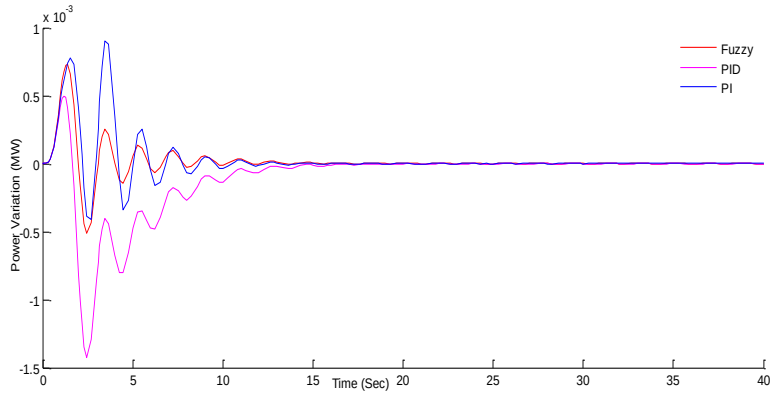

Figure 5 Power Variation Response of Two Generating Unit

Table 1 shows that Artificial Intelligence techniques gives improved and efficient result compare to PI and PID technique for two thermal generating unit.

Table 1: Comparative Result of Two Generating Unit

Techniques	Settling Time (Sec)	
	Frequency Variation (Hertz)	**Power Variation (MW)**
PI	28	44
PID	27	43
Artificial Intelligence (Fuzzy)	20	21

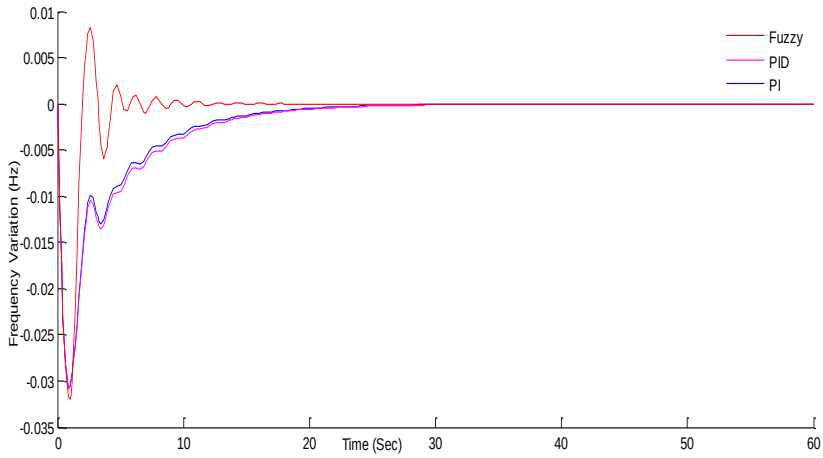

Figure 6 Frequency Variation Response of Three Generating Unit

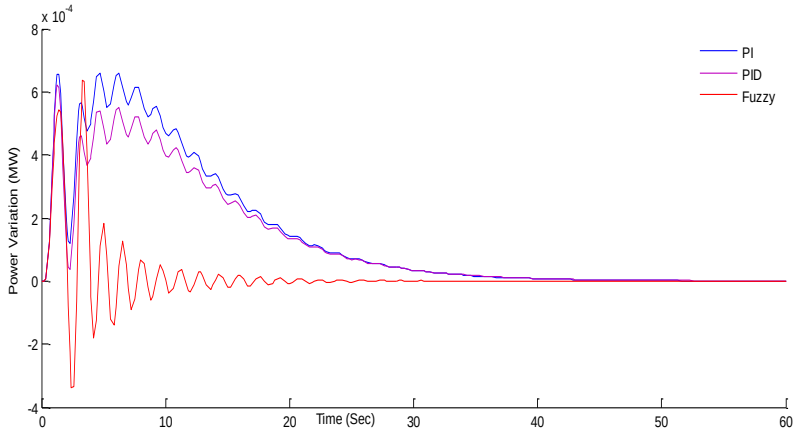

Figure 7 Power Variation Response of Three Generating Unit

Comparative results of all obtained dynamic responses of three generating units have been tabulated in Table 2.

Table 2: Comparative Result of Three Generating Unit

Techniques	**Settling Time (Sec)**	
	Frequency Variation (Hertz)	**Power Variation (MW)**
PI	28	44
PID	27	43
Artificial Intelligence (Fuzzy)	20	21

Table 2 shows that Artificial Intelligence techniques gives improved and efficient result compare to PI and PID technique for three thermal generating unit.

Comparative results of all obtained dynamic responses of two generating units have been tabulated in Table 2.

5. CONCLUSION

In this paper the issue of power and frequency in the generating station has been focused and thermal unit (Two and Three Generating Units) taken as a source of power generation. An artificial intelligence technique (Fuzzy) and Traditional technique (PI and PID) has been applied to solve frequency and power problem. Transfer function model of two and three thermal generating units has been obtained and simulated through MATLAB Simulink software. Load change has been assumed to 0.02 variation. Comparative dynamic response of system has been shown in figure 4 to figure 7 and results are tabulated in Table 1 and Table 2, which shows that the artificial intelligence technique (Fuzzy) gives very good efficient, favorable, finest results with respect to the traditional technique (PI, PID). So, it can be concluded that artificial intelligent technique performs better when the system is being complex with increasing number of generating units 2, 3 etc.) also this paper satisfying abstract and all the system parameters.

APPENDIX

Two and three thermal generating system's parameters are as under: Frequency f = 50Hz; $R_1 = R_2 = R_3 = R_4 = 2.4$ Hz/p.u MW; $T_{gov1} = T_{gov2} = T_{gov3} = T_{gov4} = 0.0\ 8$ Sec; $T_{gen1} = T_{gen2} = T_{gen3} = T_{gen4} = 20$ Sec; $Ttur_1 = Ttur_2 = Ttur_3 = Ttur_4 = 0.3$ Sec; $a_{12} = a_{23} = a_{34} = a_{41} = 1$; $H_1 = H_2 = H_3 = H_4 = 5$ MW-S/MVA; $P_{r1} = P_{r2} = P_{r3} = P_{r4} = 2000$ MW; $K_{gen1} = K_{gen2} = K_{gen3} = K_{gen4} = 120$ Hz/pu MW; $K_{gov1} = K_{gov2} = K_{gov3} = K_{gov4} = 1$; $K_{tur1} = K_{tur2} = K_{tur3} = K_{tur4} = 1$; $D_{1234} = 8.33*10^{-3}$ p.u MW/Hz.; $b_{1234} = 0.425$ p.u.MW/hz; $\Delta P_{D1234} = 0.01$ p.u; $T_{12} = T_{23} = T_{34} = T_{41} = 0.0\ 867$ MW/ Radian; $P_{tie\ max} = 200$ MW.

REFERENCES

1) Gómez Sánchez, M.; Macia, Y.M.; Fernández Gil, A.; Castro, C.; Nuñez González, S.M.; Pedrera Yanes, J. A Mathematical Model for the Optimization of Renewable Energy Systems. Mathematics 2021, 9, 39. https://doi.org/10.3390/math9010039.
2) Han, D., Tong, XJ. Review of Mathematical Methodology for Electric Power Optimization Problems. Journal of the Operations Research Society of China volume 8, 295–309 (2020). https://doi.org/10.1007.
3) S. Ghosh, A. Gupta, H. Dashora and S. Ranjan, "Mathematical Approach to Generate Efficiency, Maps for Induction Motor and Optimization for EV", 2020 IEEE First International Conference on Smart Technologies for Power, Energy and Control (STPEC), Nagpur, India, 2020, pp. 1-6, DOI: 10.1109/STPEC49749.2020.9297758
4) Arora, K., Kumar, A., Kamboj, V. K., Prashar, D., Jha, S., Shrestha, B., & Joshi, G. P. (2020). Optimization Methodologies and Testing on Standard Benchmark Functions of Load Frequency Control for Interconnected Multi Area Power System in Smart Grids. Mathematics, 8(6), 980. DOI:10.3390/math8060980.
5) Montoya, F. G., Baños, R., Alcayde, A., & Manzano-Agugliaro, F. (2019). Optimization Methods Applied to Power Systems. Energies, 12(12), 2302. DOI:10.3390/en12122302.
6) Chaturvedi Ratnesh and Dwivedi Bharti. (2014). Fuzzy and PI Controller Based Load Frequency Control of Thermal-Hydro Power System, International Journal of Innovative Science, Engineering & Technology, Vol. 1 Issue 3 http://www.ijiset.com/v1s3/IJISET_V1_I3_44.pdf.
7) Hassen S. Z. Sayed and Jahmeerbacus M. I. (2013). Optimal Frequency Regulation of a Two-area Power System, 2013 IEEE International Conference on Industrial Technology (ICIT) pp. 140-145. DOI: 10.1109/ICIT.2013.6505662.

8) Surya Prakash, S K Sinha. (2012). Four Area Load Frequency Control of Interconnected Hydro-Thermal Power System by Intelligent PID Control technique, Students Conference on Engineering and Systems pp. 1-6. DOI: 10.1109/SCES.2012.6199090.

9) Anupam Trivedi, N. M. Pindoriya, Dipti Srinivasan and Deepak Sharma (2011). Improved Multi-objective Evolutionary Algorithm for Day Ahead Thermal Generation Scheduling. IEEE Congress of Evolutionary Computation (CEC) pp. 2170-2177. DOI: 10.1109/CEC.2011.5949883.

10) S. Sivanagaraju, G. Sreenivasan. (2011). Power System Operation and Control, PEARSON, https://www.pearsoned.co.in/prc/book/s-sivanagaraju-power-system-operation-control-1e-1/9788131726624.

11) Gabano J.D., Poinot T. and Kanoun H. (2011). Identification of a Thermal System Using Continuous Linear Parameter Varying Fractional Modelling, IET Control Theory Application, Vol. 5, issue 7, p. 889-899, DOI: 10.1049/iet-cta.2010.0222.

12) Park Min-Su and Chun Yeong-Han. (2009). Tuning of Generating Unit Controller for the Generators with Governor, 2009 Transmission & Distribution Conference & Exposition: Asia and Pacific, pp.1-4, **DOI:** 10.1109/TD-ASIA.2009.5356854.

13) Rakhshani E. and Sadeh J. (2008). Load Frequency Control of Multi-Area Restructured Power System,

System, 2008 Joint International Conference on Power System Technology and IEEE Power India Conference IEEE Power India Conference. pp 1-7, DOI: 10.1109/ICPST.2008.4745224.

14) Sinha S. K., Prasad R. and Patel R. N. (2009). PSO Tuned Combined Optimal Fuzzy Controller for AGC of Two Area Interconnected Power System, 2009 World Congress on Nature & Biologically Inspired Computing (NaBIC) pp. 537-542, DOI: 10.1109/NABIC.2009.5393392.

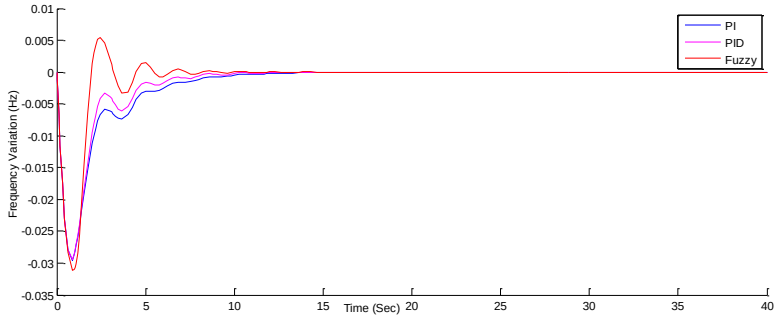

2 unit generating unit Fz

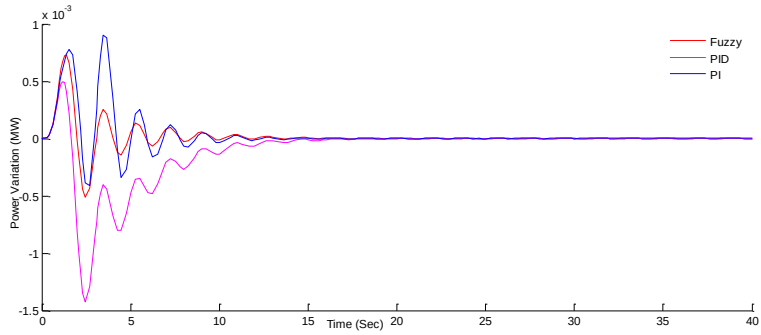

2 unit generating unit Power

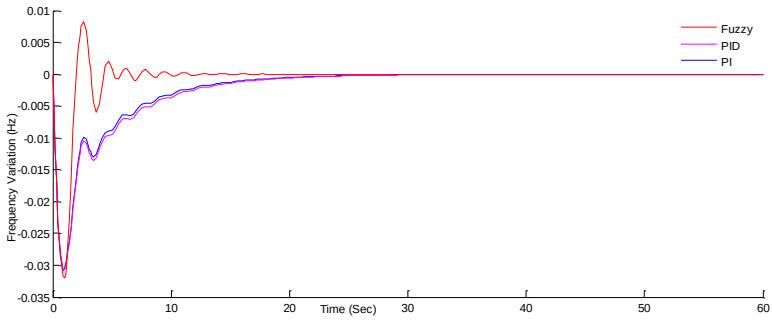

3 unit generating unit Fz

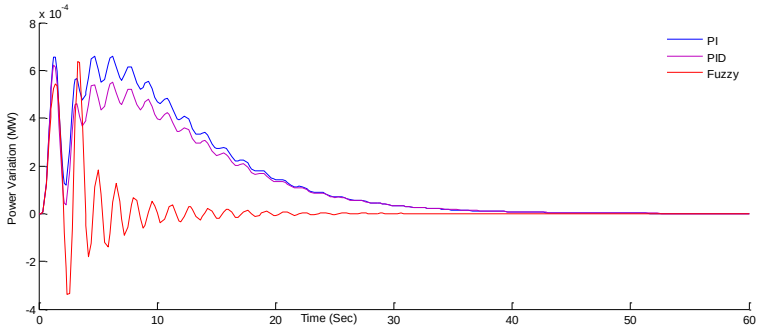

3 unit generating unit MW

CHAPTER 3

ARTIFICIALLY INTELLIGENT SEXBOTS A MODERN ROMANTIC PARTNER: BLESSING OR A CURSE FOR FUTURE SOCIETY?

Ms, Muniza JAVED [1]

[1] Lahore College for Women University, Lecturer ,Sociology, Punjab, Pakistan.
ORCID: 0000-0003-4289-7189, Email:muniza.javed66@gmail.com

INTRODUCTION

Since, from the birth of computers and its rapidly increasing usage, it was a dream of mankind to create a masterpiece in history of computers which works not just technically but also intelligently[2]. The idea of artificial intelligence sprang to human mind long time ago.The term artificial intelligence remained debatable throughout years and created so much confusion because of its undefinable nature. Till now there is no such specific definition which completely defines artificial intelligence precisely[13].

The New International Webster's Comprehensive dictionary of the English Language Encyclopedia Edition itself defined this term in four different ways. The dictionary defined artificial intelligence in one way as "*it is concerned with the development of computers able to engage in human-like thought processes such as learning, reasoning and self-correction*". Because of its ongoing developing nature the term artificial intelligence keep on updating. Artificial Intelligence is a complete system now and defined as a system that thinks and act like a human[18].

1. ARTIFICIAL INTELLIGENCE AND SOCIETY

The continuous development in AI causes an enormous impact on society which is escalating. The biggest impact of AI on society is its phenomenal traits which is replacing human labour in various sectors of society. In one way, it is providing benefit by reducing human burden but on the other way; it is smartly taking over the human place

in society by performing all human tasks steady then human itself can do[12].

Computer systems and technology is marking a long-term effect on human life and society. The existence of AI is not new, it started becoming a part of human society from decades. The reason AI get hype in technology world is its computational power and large data sets. Today, AI is rapidly used in various sectors of society including healthcare, education, business and market sector, security, entertainment and gaming[13].

Society will see in no time that artificial intelligence will hold a prominent place in those areas where only human capabilities were used. Various industries are adopting Artificial Intelligence gradually and in upcoming few year AI will get high acceptances in the industrial sector. According to a latest research, by 2025 the AI software revenue will reach up to $90 billion dollars. Business managers around the world are looking forward to a machine having more advance humanlike traits which can make business sector faster and smarter[3].

1.1. Artificial Intelligence in Everyday Life

Machines didn't capture the world completely yet. However, they are gradually filling human spaces and taking over us by making our daily life activities dependent on them. Applications of Artificial Intelligence are everywhere in our life from little to bigger use. It is quite fascinating to have a voice-powered personal assistant like

Alexa and Siri at home or while driving to office or any place having a voice-powered navigation guider[2].

Where there is a possibility that artificial intelligence machines are making human lives easy and fast; it will also make humans capable of nothing by performing more efficient tasks than humans. There will be huge economic benefits AI will bring in various sectors but it will also disrupt the whole societal system by increasing huge unemployment rate[4].

AI took healthcare facilities to next level. It has shared the burden of hard decision making of clinicians and therapists about critical diagnosis which is clearly a blessing for human society. Apart from healthcare AI didn't just made human lives easy but also made human security more advance which is a plus[8]. Autonomous weapon system is one of the product of AI which made a critical function of selecting and targeting more accurate and significant. On the other side, many countries considered it more a security threat than a security advancement[13].

Some of the much hyped inventions and widely used products of AI are Tesla a self-driven car, Cogito, Boxever and Amazon provided tremendous benefits to market industry. Netflix and Pandora made human's leisure time more entertaining[8]. One of the revolutionary product of AI in technological era is Robots. Robots are moving machines embodied with AI. Initially, it was an enormous challenge to make machines human and environment friendly. But now after their second phase of development it is declared as safe and reliable[9].

In the beginning, people only use rebots in manufacturing industries and on the separate spaces than humans. But now human-machine interaction is increasing day by day. Different robots are available in markets for different purposes and also for different sectors[4]. The modern development in robotic manufacturing is disaster response robots, robot maids and the exceptional one is sexbots. Sexbots is a term derived from two words Sex and Robot[5].

2. SEXBOTS AND FUTURE OF SOCIETY

2.1. Sexbot an Artificial Sexual/Intimate Companion

After, various significant developments artificial intelligence have surprised everyone with sexual technologies termed as Sexbot. There is a mix response coming from groups and Individuals. Some find it an exciting contribution to human society and future of ideal sexual relation. Whereas, others consider it a threat to human society as commercializing sex will increase existing social issues like gender inequality and sexual objectification[5].

Sexbots got little market place yet, but it has gained public attention and acceptance. A poll conducted in 2017 among US adults stated that 1 in 4 men and 1 in 10 women showed their consent to having a sexual relation with a robot. Almost 50% adults find sexbot attractive because of its humanly look. Otherwise no one feels like having a sexual urge towards a machine looking robot[17].

Human being by nature is selfish and controlling and want their desires to get fulfilled at all cost. Every human have their own

intimate fantasy and wants their partner to be exactly like the way they fantasize which increase expectations among two people in a relationship. But the problem arises when the other person can't fulfil their partner's desire because human being is imperfect and uncontrollable, this in result cause frustration, detachment and end of relationship[14].

Humans are unsatisfied creature on earth. They can't survive alone without intimate relation but also want everything in relation according to their demand. The manufacturers of sexbots have designed it smartly by keeping human nature in mind so definitely it will attract humans. The physical appearance of sexbots is nearly like humans which can make any human to fall in love with the machine. Plus, it is programmed with human desired features like sexbots have built-in intimate emotions, can talk intimately and also can fulfill sexual needs as per the person's desire[6].

Normalizing human-machine intimate relationship will definitely be a threat to human-to-human interactions and behavior. Machines are man made and a product of human mind so it definitely have a tendency to be exactly like what a person imagine or visualize. Customizing feature of sexbot according to your will and fantasy give this product an edge. Manufacturing an ideal looking female sexbot with fair and flawless looks with perfectly toned bodies and features of sexual performances according to a person's preference makes human-machine relation demanding over human-to human relation[9].

Human's demand to have an intimate companion with whom they have a quality romantic relationship is considered as a fundamental right and also a strong predictor for the wellbeing of human mental and physical health. In that case, it is valid for any human being to demand a sexual partner who is sensitive enough towards their partner's emotional and sexual needs[11]. Arguments and fights make any relation bitter and hard to take ahead. It is evident that humans have natural traits like jealousy, emotional sensitiveness, possessiveness, mistrust, anger and over touchiness while being in relation. No matter how natural these feelings are it definitely makes anyone feel suffocated and frustrating in relationship[5].

Sexbots on the other side are free from such natural traits and can show only those emotions which a person wants. It made sexbots attractive and demanding because it is also human nature that they want peace, excitement and pleasure. Sexbots is a solution of hard relationship problems. But this is not a continuous solution because it's the dual mentality of human being that no matter how frustrated they feel from jealousy and sentimental emotions; still they want their partner to show such emotions[1].

2.2. Psychological Perspective

We are living in a modern era prone to more sexual liberation.Today it is very easy to get all the sex toys you need and sexbot is one of the product considered as an outcome of sexual liberation. The purpose of sexbots is to facilitate humans and fulfill their desired sexual needs

but it also brings some health constraints and will give hype to psychological issues in humans[6].

Sexbots manufacturers claim that their hyper-realistic dolls are safer for humans both physically and mentally. Even some inventors proclaimed sexbots can play a beneficial role in preventing mental health issues. Not only that, they can reduce sexual assaults and harassment issues in society. Sexbots inventors suggested these dolls are a reliable tool for majorly men and to some extent women to achieve their desired sexual needs. In result of this, it will reduce sexual crimes in society[20].

Some researchers from St George's University Hospital National Health Services (NHS) in London and the Women's Health Academic Centre at King's College London stated that there is no scientific ground of benefits of sexbots in society. Whereas, some other scientists like Chantal Cox George and Susan Bewley assumed sexbots may have therapeutic effects. To support this assumption, they tried to gather potential supports from literature but didn't find any specialized literature which proves that sexbots can play a role in a person's mental health[7].

However, Cox-George and Bewley claimed in their published work that sexbots can be useful in creating a therapeutic effect on people with mental disorders like pedophilia and other form of sexual assaults. Their claim was highly criticized by other researchers who think that without any hard evidence this claim is vague. Cox-George and Bewley also gave a counter claim with their statement of sexbots

being beneficial for reducing sexual violence. They stated that there is also one more possibility that sexbots may strengthen and normalize unusual sexual urges which leads to a harmful addictive behavior in person[17].

There was one more point highly debated by some researchers; that sexbots will be very useful for people having anxiety because of loss of partner, loneliness, unhealthy and unsatisfactory sexual life or any other health problem like erectile dysfunction. This can be one of a sound reason for the purchase of sexbots. Still it can't deny the possibility of negative psychological consequences of its usage[14].

2.3. Sociological Perspective

Every innovation brings positive and negative social implications same goes with Sexbots. From, its mere idea to its manufacturing and launching in market there are so many speculations about sexbots benefits and harmful consequences in society. Inventors claim its production as an enormous step in development of technological society and also a solution to increasing sexual crimes. Whereas, many critics and researchers claim the production of sexbots useless to control any crime and also to be a reason of new type of societal crimes[5].

First, robots were just man-made machines invented to help humans in various onerous tasks to make it easy and efficient. But later on human's curious mind upgraded robots into human look alike product called social robots. These social robots are one of the most innovative and interesting production in the history of mankind. Social robots

exist in almost every sector like education, healthcare, security and even in homes like performing those household tasks which only humans can do[1].

It is so fascinating to have robots who look exactly like humans are working within humans domain and performing humanly tasks more accurately and efficiently than human. Sexbots are also a subtype of Social robots. After, the social acceptance of social robots working in homes and sharing a burden of human's daily chores. Human mind come up with the idea to take assistance of robots in romantic needs as well. Various social robotics scholars found a positive impact of carebots on elderly people in order to comfort them. It is assumed that if carebots can be beneficial to society then sexbots can also give positive support to depressed humans in terms of intimate feelings[15].

Some researchers claimed that the normalization of sexbots in society will create a mindset in humans to treat machines and things like human which is not harmful. But this mindset can also bring another impact in human's mind to treat humans like entity. We as a society are facing issues like body shaming, sexual assaults and gender inequality at major level and still found little solutions to these issues. In that manner, sexbots will give more hype to these issues instead of reducing them[7].

It is found that majority of Sexbots are women and children dolls and rarely male dolls are produced because of high demand of extremely perfect looking women doll and children doll among men. Those men include both normal men who demands beautiful sexbots for pleasure

and also men having any disorders like pedophilia, Submissive personality disorder who can control the other person to get sexual pleasure[20].

Critics claimed that customizing and passive consent features in sexbots will create negative consequences in society. Allowing a person to customize female doll according to their fantasy with flawless skin and perfect toned body will create more discrimination with women in society and also produce psychological issues in women. Whereas, passive consent feature will promote rape culture and the idea that ideal partner are those who are always available for sex and get easily controlled. It will also legalize the concept of an abusive relationship[17].

2.4. Economical Perspective

Economically, sexbots are as expensive as any other robot in the market. Possibly it can be more expensive by the time than other robots because of its unique features and complex system with demand of advanced AI. The use of traditional technologies may result into unpredictable risks in sexbots[1]. With ongoing AI advancement, technological innovation and high maintenance make sexbots extremely expensive product in the market. It is clear from the above statement that not everyone can afford sexbots which in result may decrease its sales. But its attractive feature will make it high demanding among majority, to atleast have it once in life[20].

Presently, sexbots are available in few countries only and a major part of the world don’t know about it or if they have idea, then sexbots

have no such high demands yet among public. Sexbots will definitely raise its market value by the time. The estimated market price of sexbots now is $5000 to $15000 dollar which is already high price but it will get more increased sooner when its demand will raise. It is human nature that they go after such things which are unaffordable for them. Unfortunately, because of its attractive features but expensive price, sexbots will raise thief crimes in society[14].

CONCLUSION

George Simmel a sociological theorist who majorly worked on everyday behavior of people stated that it's a growing tragedy of culture that overtime objective culture will grow exponentially while individual culture and the ability to produce objective culture grows marginally. From objective culture he meant the objects humans produce and subjective culture is the ability of humans to produce.

This statement of Simmel goes in line with the example of sexbots in society. Sexbots is the objective culture whereas, the capacity to produce it and its advancement is in humans control which is individual culture. In the race of this technology production and advancement, humans forget that their own production is replacing them everywhere and making them least important. Technological advancement definitely has positive impact and such products like social robots and sexbots have benefits as well. But in process of making our life easy, efficient and according to our choice we are loosing human significance and credibility.

Usage of sexbots are not normalized yet in our society so all sociological, psychological, economical and any other reasons are presumed, experts analyzed or based on existing evidents and judgements. Sexbots positive and negative consequences will be more prominent after its complete acceptance in society. But do society will ever accept it completely it is another debate.

In conclusion, sexbots are designed in a way that they can give temporary pleasure and satisfaction to human needs. No matter how much advance they get by the time still they can never replace human sentiments and feelings. Human companionship is not all about sexual pleasure only it also includes sentiments, care, respect and belonging traits. These traits are a unique part of human only that's why human being is an unreplaceable creature. It's a universal truth no relation can survive without emotions which clearly depict that machine-human relation is temporary and human-human relationship is eternal and long lasting.

REFERENCES

1. Andreallo, F. (2019). Robots with benefits: how sexbots are marketed as companions. The Conversation.

Retrieved from: https://theconversation.com/robots-with-benefits-how-sexbots-are-marketed-as-companions-126262

2. Allen, G., & Chan, T. (2017). Artificial intelligence and national security. Cambridge (MA). Belfer Center for Science and International Affairs.
3. Berger, I. W. (2018). The Impact of Artificial Intelligence on the World Economy.The Wall Street Journal.
4. Cockburn, I. M., Henderson, R., & Stern, S. (2018). The impact of artificial intelligence on innovation. National Bureau of Economic Research.
5. Carina et al. (2021). Human–Robot Interaction and Sexbots: A Systematic Literature Review. Sensors 21:1, pages 216.
6. Cohut, M. (2018). Sex Robots may do more harm than good. Medical News Today.Retrieved.https://www.medicalnewstoday.com/articles/322030#Sexbot-use-unrelated-to-healthcare
7. Cox- George, C., & Bewley, S. (2018). Sex Robot: the health implications of the sex robot industry. BMJ Sexual & Reproductive Health. Retrieved from: doi:10.1136/ bmjsrh-2017-200012
8. Derrington, D. (2017). Artificial intelligence for health and health care. See https://www.healthit.gov/sites/default/files/jsr-17-task-002_aiforhealthandhealthcare12122017. pdf (last checked 8 November 2018).
9. Dautenhahn, K. (2007). Socially intelligent robots: dimensions of human-robot interaction. Philos Trans R Soc Lond B Biol Sci.
10. Eyssel, F., & Kuchenbrandt, D. (2012). Social categorization of sex robots: Anthropomorphism as a function of robot group membership. Br. J. Soc. Psychol. 51, 724–731.
11. Facchin, F., Barbara, G., & Cigoli, V. (2017). Sex robots: the irreplaceable value of humanity. BMJ.

12. Kok et al. (n.d). Artificial Intelligence: Definition, Trends, Techniques and Cases. Leiden University:Leiden Institute of Advanced Computer Science.

13. Luger, G. F. (2002). Artificial Intelligence: Structures and Strategies for Complex Problem Solving. 4th edn. Reading, Mass., Addison-Wesley. [General textbook.]

14. Lee, J. (2017). Sex Robots: The Future of Desire. London, UK. Springer. ISBN 331949332121

15. Levy, D. (2007). Love and Sex with Robots. New York, NY, USA.Harper Collins.

16. Mackenzie, R. (2018). Sexbots: Avoiding seduction, danger and exploitation. Available online: https://www.rivisteweb.it/issn/1122–7893.

17. Miller, C. & Miller, I. (2018). Sexbots the future of fornication. Public Health Post.

Retrieved from: https://www.publichealthpost.org/research/sexbots-the-future-of-fornication/

18. Shapiro, S. C. (1992). Encyclopedia of Artificial Intelligence. 2nd edn., Vols. 1 and 2. New York, Wiley. [Overview of the field of AI.]

19. Sharkey et al. (2017). Our sexual future with robots. Foundation for Responsible Robotics [online].

20. Trovato, G., Lucho, C., & Paredes, R. (2018). She's electric: The influence of body proportions on perceived gender of robots across cultures. Robotics. doi:10.3390/robotics7030050.

CHAPTER 4

POTENTIAL OF ARTIFICIAL INTELLIGENCE IN FOOD APPLICATIONS

Dr. Muhammad Haseeb Ahmad*[1]

Mr. Muhammad Faizan Afzal[2]

Dr. Muhammad Imran[3]

Mr. Muhammad Armghan Khalid[4]

Dr. Muhammad Sajid Arshad[5]

Mr. Muhammad Zubair[6]

[1] Department of Food Science, Government College University Faisalabad, Pakistan
***Corresponding author Email:** haseeb.ahmad@gcuf.edu.pk
[2] Department of Food Science, Government College University Faisalabad, Pakistan
[3] Department of Food Science, Government College University Faisalabad, Pakistan
[4] Department of Food Science, Government College University Faisalabad, Pakistan
[5] Department of Food Science, Government College University Faisalabad, Pakistan
[6] Department of Home Economics, Government College University Faisalabad, Pakistan

INTRODUCTION

Food, is a well-known necessity for humans, and it may be regarded as the best result of farming after producers distribute numerous commodities. Food production and variables that impact commodities markets in a demand-supply chain have been discussed in recent years. These revelations have raised serious concerns about evolution's ability to sustain such high rising demands and maintain the world's rising population as well as critical to every country's growth (Kakani et al., 2020). It also plays an important role for curtailing challenges like development of the country and global economies, climate change, and other environmental risks caused by mankind over decades. In particular, the increased demand for food items necessitates crudely equivalent production quality as well as sustainable methods. The UN's Food and Agricultural Organization (FAO) estimates that by 2050, the world's population will have increased to about 9.1 billion people (Godfray et al., 2010). This prediction effectively extinguishes the requirement to compensate for a 70 percent increase in global food supply as well as a nearly double increase in emerging nations.

The word "undernourishment" refers to a difficulty to obtain adequate food as well as lack of food consumption in order to satisfy the energy needs (Habicht et al., 2004). The food industry in terms production quality and safety, as well as effective distribution, are critical. Novel food production and processing techniques have been made possible due to modern food industry advancements. Wide range of food have

been in demand over the recent decades, including some peculiar varieties like functional foods, that have proven to be a key to maintaining lifestyle (Blaxter., 2003). For satisfy customer needs and supply efficiently, the food industry chose a finite number of food processing techniques. Newly developed technology, like artificial intelligence (AI), has proved successful in accomplishing in the last few decades (Misra et al., 2020).

Therefore, modern agricultural and food processing technology were adopted, and until being displaced by intelligent sensors and production plants (Mahalik & Nambiar., 2010). AI-based techniques play important role to explore sustainable farming as well as the advanced food sector. These techniques meet societal challenges while also delivering high-quality products on time. The food business may create a huge variety of food items in a shorter period by employing modern technologies, that would tremendously enhance the company economy (Misra et al., 2020). AI-based systems, also known as autonomous systems, are widely used in almost each aspect of technology. It permits the globe to solve problems more efficiently, digitize the food business, as well as transform food stuffs (Soltani-Fesaghandis & Pooya, 2018). The industry may use a computerized system to evaluate and ensure that the most desirable characteristics, like seed selection, temperature monitoring, as well as crop monitoring, are improved, leads to better food manufacturing items (Donepudi, 2014; Vadlamudi, 2018). Artificial intelligence applications aren't bounded to only these beyond this, food production, preservation, as well as transportation may all benefit

from it. Smart sensors, like as robots and autonomous drones, can play a vital role in lowering packing costs. AI aid in delivery of food items, the fulfillment of tasks in hazardous environments, as well as availability of quality items (Castillo & Meliif, 1970; Tyagi, 2021).

NOVELTIES IN FOOD SECTORS

Food industries were modernized with the passage of time from the use of simple apparatus to engaging of heavy machineries. Food manufacturing sectors as well as Agriculture contribute in the production and processing of approximately 64% worldwide food, therefore it is necessary for these sectors to use advance technologies. Every sector which is associated with food industries used the innovative technologies with the passage of time to enhanced the productivity as well as to minimize the losses. Moreover, the modernization in any field should be beneficial such as to encourage the economic value and expand the income propagative opportunities (Gillis et al., 1992).

MODERN TECHNOLOGIES AND FOOD INDUSTRIES

For a decay, Agriculture is one of the traditional businesses which is affected by the weather conditions and susceptible climate variations. Tt was expected that about 570 million farms were involved to use the traditional methods to accomplish crop yield (Lowder et al., 2014). Agriculture business was at its peak in the early 80’s because of high demand of viable crops such as coffee, cotton and coco but far along this trend was turned to decrease due to essential and commercial crop

interaction (Zhang et al., 2007). The advancement in the agriculture sector was persuaded due to increasing migration of people towards cities and limiting ratio of farmers. The implementation of modern techniques enhanced the farming as well as food production, while these approaches also enhanced the opportunities for future perspectives and solution of current complications (Stuiver et al., 2004). The importance of innovations in research and progress induced a number of researchers to assess and improve the advanced technologies in agriculture. The investments in agriculture business with respect to modernization lead to the modern age of agriculture industrial sector. Agriculture sector has been advanced by the use of many inventions which create a lot of current issues related to agriculture that should be resolved by the innovation in wireless communications, geo-satellite research, atomization and several related arenas. (Morgan & Murdoch, 2000).

Geographical systems (GEOSYS), Monitoring Agricultural Resources (MARS) and Astrium-Geo are involved in the Satellite monitoring technologies aid the agricultural sector by some features like real-time crop vegetation index and spectral analysis with the use of satellites SPOT-6, IKONOS, RAPIDEYE and many others (Low et al., 2015). The advantages of these technologies are not limited to farmers but the other people like investors, businessman as well as organizations are equally entertained through forecast information with respect to future perspectives. Technologies like soil sensor systems, weather forecast help the farmers in smart seeding and proper harvesting. Fertilizer modelling, proper irrigation and advancement in harvest are

involved in the second level of technologies that effected the crop production (Morais et al., 2005). Farmers are motivated from traditional methods to the viable modern approaches by the use of these innovative technologies from last three years.

Modernization in agriculture enhanced the trade and investments over all the world. these innovative aspects in agriculture influenced the environmental changes that are inevitable. The present worldwide temperature has been increased approximately 0.6 ^{0}C as compared to the average temperature for the last century (Tilman et al, 2001). the emission of carbon dioxide that is greenhouse gas in high amount influenced the areas that are involved food insecurity. Lack of water resources and land lead to the drastic climate change (Gerber et al., 2013). These innovations reveal the destruction of environment as well as natural resources as side effects but it is encouraging to implementation of advanced techniques in agriculture for the better yield.

FOOD SECTOR PERSPECTIVE

Food economy may be influenced by the severe changes in the food processing as well as food administration in the food industry perspective. Food processing is affected by numerous factors like current trends, customer interest as well as psychology, nature of food and human health (Lyman, 2012). These limitations executed the food sectors to upsurge the implementation of these advanced technologies to improve the waste management, production and substantial market demand (Otterpohl et al., 1997). It is observed that customer interest

for food can be changed with respect to use of advanced techniques and marketing approaches influenced the market trend (Guptill & Wilkins, 2002). According to Global food technology, the market demand for integrated foods can be increased by such phenomena like social occasions, stress relief and tolerance (Perrot et al., 2011). The adaptation in the functional food is caused due to increasing demand of awareness related to health and wellness.

FOOD INDUSTRY AND FOURTH INDUSTRIAL REVOLUTION

Computer vision and AI in food sectors

Researchers believe that artificial intelligence may develop into something like a big platform driving numerous sectors in 2020 as a consequence of rapid set of advancements in the AI industry (Müller & Bostrom, 2016). The major cause behind this fast growth of digital data, that is expected to reach 400 billion gigabytes per year by 2020 (Batista & Marques 2017). Towards this massive data and disciplined AI companies, 4th Industrial Revolution (4.0 IR) use creative methods for solving current issues in many areas. The advent of manufacturing machines and techniques to erect structures led in the Industrial Revolution (IR). The period of the second Industrial Revolution (2.0 IR) began with the development of electricity, television, as well as aero plane (Atkeson, & Kehoe, 2001). The industry had not suffered a major setback until the 1970s, when computers and the internet transformed the image of the globe by globalisation and accessibility, ushering in the Third Industrial Revolution (3.0 IR) (Blinder, 2006).

The manifestations of the 4th Industrial Revolution (4.0 IR) may see in each industry sector due to recent advances in AI, machine learning, and advanced analytics (Younus, 2017). The food sectors one of the businesses that has previously shown a massive effect from AI on its techniques, instruments, and machines. The advent of Automation methodologies and robots in agricultural and food manufacturing, farming, planting, as well as processing methods are evolved.

Technology can do more than simply display food photos; they also identify as well as display details about meal's nutritional facts. International Business Machines Corporation AI Watson became the first AI chef in 2016 by suggesting special as well as inventive recipes simply by checking at the components. IBM's Watson silenced top chefs itself with major function of displaying changes in a recipe with same ingredients (Pinel et al., 2015). Advanced analytics are AI technologies that have made it possible to interpret pictures using a computer's vision. Since 2012, computational imaging and sensor fusion was disciplines that processed images as well as allowed computers to interpret the image content, allowing them to make choices. With the emergence of machine learning techniques, computer vision has been able to shove its skills to greater levels, achieving the pinnacle of technical development in tasks like object identification, tracking, as well as face recognition, among others. Data, pictures, movies, linguistic sequences, and so forth (LeCun et al., 2015). Deeper neural pathways were shown to produce superior

outcome of efficiency in 2014, that called attention to improving service and learning techniques (Szegedy et al., 2015).

Numerous criteria with huge quantities of data for testing and training were established, and a prominent challenge to evaluate the efficiency of convolutional models on such benchmarks was launched (Goodfellow et al., 2016).

AI in Food Processing

Researchers are analyzing relevance and use of several fields of artificial intelligence mostly in food processing sector, including analytical thinking, machine learning as well as robots. Alongside food production, the food hygiene is crucial, as AI plays a significant role in completing the whole multiprocessor work it also work for food hygiene.

Sorting and Packaging of Product.

One of the laborious duties as well as time-consuming procedures for production units in the food processing sector is the accurate order and packaging of food items. As a result, quite a time-consuming operation may be done by AI-based technologies, reducing the risk of failure as well as boosting the industry's output rate. Due to variations shape, colours, and textures of fruits and vegetables, establish AI-based technologies is a difficult challenge. A considerable quantity of information is necessary for building an AI-based selection and packing method so the computer may be fully trained as well as execute the task efficiently (Tripathi et al., 2020; Dewi et al., 2020).

Because of the same objective, different researchers created multiple programs.

TOMRA may be one of them, seems to do the sorting operation quite efficiently. It increased manufacturing reliability by 90 percent in a short period of time. The automation now performs the majority of product sorting as well as packing tasks. Manufacturers benefited from the use of such technologies by achieving quicker production rates, increased yield qualities, and lower wages. High-resolution webcams, sensor devices, X-ray-based systems, and Infrared spectrum are one of the techniques that used in AI-based intelligent decision-making systems. Somewhere at input, such techniques are utilized to evaluate all element of food items like fruits and vegetables. Traditional methods can only distinguish between excellent and awful items based on its appearances. It has already been found that using TOMRA, the separating or sorting issues may be addressed through 5–10 percent only in the case of potatoes (Onishchuk, 2020).

Japanese firm that utilizes a TensorFlow ML-based system deal with a similar challenge and obtained a fantastic result with considerable advantage in their manufacturing unit, that method has indeed produced excellent results in the food industry. Furthermore, most business discovered that the AI-based technology is much more accurate. The success of AI-based systems for potatoes stimulates the growth of AI-based systems for many other applications as well, it might be modified for various sectors or units within the food production business.

Personal Hygiene

Several governments across the world, including the United States, have implemented food manufacturing unit cleanliness guidelines. The AI-based systems have also managed of such regulations. Earlier, the KanKan and the Shanghai municipal health department collaborated to create an AI-powered system. The very first AI-based technology is intended to provide confidential quantities with scene and facial recognition. The method would be used to keep track of those who don't respect laws (Rary et al., 2020). If something matched, it may be addressed immediately without hesitation. Because the developed system produces fantastic results, it is designed to encourage the service to include even more companies.

Decision-Making System for Customers

AI is supporting clients in identifying novel essentials and supporting food manufacturing companies in generating unique taste amalgamations (Dehghan-Dehnavi et al., 2020). Kellogg released BearNaked-Custom in 2018, which allows consumers to create their own customised oats using more than 50 ingredients. When it comes to a lot of each customer, it keeps track of their tastes, consumer taste preferences. This sort of data is critical for putting a new product to the market (Yost & Cheng, 2021). Therefore, AI plays a key part in the development of clients to benefit systems.

Maintenance and Cleaning of Equipment

Maintaining and sanitizing production equipment is extremely important in the food processing industry. AI-based systems are well-suited for such a job (Wang et al., 2020). The work is carried out using a variety of cams as well as sensors. One of Whitwell and Martec's products suffers from the fact that it must be reduced to 50 percent of its original size, allowing for more effectiveness and far less time. Martec is currently attempting to defend their AI-based cleaning service concept. Martec uses ultrasound sensor imaging technologies and optic fluorescence ways to nurture the collected data for the creation of AI systems (Schmidt & Piotter, 2020). It determines how much foodstuff as well as microbiological detritus is still within the system. The technology will go live when the final review from the testing stage is released.

MACHINE LEARNING (ML) APPLICATION IN THE RESTAURANT BUSINESS

The application of machine learning and artificial intelligence is not only constrained to robocrops, soil monitoring, innovative substance launching as well as automated system but also valuable in the restaurant business for numerous amenities (Bera, 2021).

AI-Based Customer Feedback System

Currently, there are several types of applications in the field of food services that assist in envisaging the number and kinds of food that are ordered and catalogues. These types of information are used for the

statistical investigation of visitor traffic as well as food stuffs that are required during a time (Ponnusamy et al., 2020). This information is attained through a process by merging the former data of activities with respect to customers, habits, their food interests, complaints and supply chain of desired goods during that time. The collection and analysis of information assist the food service-based applications to safe many food orders from the former and new customers, hence ensuring the customer devotion. Additionally, the irradiation of ambiguities and complaints from these applications more liable and guaranteed (Stone et al., 2020). Some other applications like, payment gateway applications, the restaurant management framework, restaurant table booking platforms and cloud-based big-data applications are present which helps the function of food serving based applications.

Food-Vending Terminals and Applications

It is important for the food selling sectors to construct a liable system to pursue its online amenities to the public after developing menu and marketing plans. These industries used a system in terms of an online web site or a mobile phone application for the immediate and fast ordering as well as gained additional benefits in form of an artificial intelligence-(AI-) based system. With the raising trend of food-based commerce applications, it becomes the important choice to enlist the food selling sectors to their source (Stone et al., 2020). It permits the industry to develop better actions of these E-commerce applications with respect to spending money in designing the same for itself, while

the commission charged by the E- commerce help the industry to develop it. For the reliable and efficient performance of administrative actions like dispatching crews, creating reports and customer's objections, AI assist to develop automated customer service sections.

AI-Based Online Restaurant Search Engine

It is noticed that customers show interest towards the restaurants, cafe or bar with respect to its rankings. Hence, it is necessary for every food and beverage industry to meet well managed dealings with the customers to know about their feedback, to attract the new customer as well as to evade the trailing of former ones. nowadays, most people prefer to search food place through online medium like Google search engine and others. Artificial intelligence mediators help to informing the customers about their events, offers and sales according to their favorite food places (Blöcher & Alt, 2020).

Voice Assistants

It is estimated by a survey that approximately 27% people favored voice searching in comparison to conventional searching methods such as typing. There is option of voice searching in the food-based e-commerce applications as well as a modern age of voice commerce is introduced like Alexa by Amazon. the voice searching feature can be used by the restaurants to allow these voice commerce applications for immediate and fast orders from customers as well as it is also assisted for the new restaurants (Leung & Wen, 2020).

ARTIFICIAL-INTELLIGENCE IN FOOD SAFETY

Because of the hygienic aspect of robots, it is generally accepted in food production sectors. This peculiarity has a significant role in lowering the number of food-related illnesses. The Food Safety Modernization Act has created stronger sanitary requirements that apply to whole supply chain systems. Cereals, spices, as well as other food stuffs which do not require refrigeration are to blame, as they are in the worst prone zone of contamination. Previously, such food items appeared to be free of contamination, but the situation has altered dramatically. Intelligence approaches can certainly help in the settlement of such challenges. They are unable to spread illnesses in the same manner that human can. In contrast, managing an AI-based program is simple and uncomplicated (Fedorova et al., 2020). According to a Technavio survey, the use of robots in food manufacturing sectors will increase by 30% while also meeting government standards. There are few novel innovative inventions involving use of artificial-intelligence in food safety techniques that are expected to become well-known in the upcoming future. Their primary goal is to reduce the occurrence of food-borne illnesses

ELECTRIC NOSES AND NEXT-GENERATION SEQUENCING

Electric noses next-generation sequencing are the two most promising innovations in the food business (ENs). In the field of food security, NGS quickly replaces the DNA methodology (Yu et al., 2020). The advent of AI-based automated tools and workflows aided in the faster and more accurate formulation of data gathering and laboratory testing

than ever before. The NGS can detect dangerous inclination promptly and efficiently. It can also avert infectious outbreaks before they cause significant harm to a large number of people. ENs are mostly used as a stand-in for a human muzzle in manufacturing environments. Some sensors are installed that can precisely identify a wide range of odours. These sensors simply detect the smells in their surroundings, and the data collected is sent to a data server wherein ML algorithms may access it (Fedorova et al., 2020). An alert signal is sent to the production units depending on the choice made by the ML-based system. As a result, EN may be the prospect of food product safety.

Food Waste Management

According to research issued by the United States Department of Agriculture, "food waste in the United States is projected to represent between (30-40) percent of the food supply." This evaluation, centered on USDA Economic Research Service estimates of 31% food loss at the retailer and customer levels, equated to roughly 133 billion pounds and 161 billion $ in food in 2010. This volume of waste has far more consequences for society." According to McKinsey, AI can fix such difficulties and disengage a large amount of opening by reducing food waste by 2030. Remarkable statistics can be achieved by implementing additional regenerative recreational farming methods (Filimonau et al., 2020). Various sensors are used to collect data in this case. The gathered data is analyzed using MLalgorithms, and suitable judgments are made. Farmers can make the most accurate and

timely judgments by using them. Here are some ideas for using AI to decrease food waste:

- While some studies look at the maturation of the fruit and vegetables, others look at what microorganisms can help fruits and vegetables grow without the use of artificial fertilizers.
- Manufacturers can obtain ground evaluation purge, benefiting from renumeration of artificial intelligence that will keep a significant quantity of cash.
- Farm-based food logistics management employs computer vision technology to monitor and evaluate each step, resulting in rapid reductions in food waste.
- Artificial food tracking systems will allow us to sell stuff before it goes to waste. More farmers and individuals will be able to connect to purchase food items as a result of this. The fundamental obstacles in putting such concepts into action cannot be expressed by a single entity or body of the system.

The food sector as a whole must be changed. To create an efficient system that has a significant impact on the entire world, a full association of associates is necessary to collaborate.

ARTIFICIAL INTELLIGENCE COMPENSATION IN THE FOOD INDUSTRY

The following are some of the benefits of artificial intelligence in the food industry:

- In recent years, virtually all food processing sectors have unquestionably embraced AI to enhance the demand supply chain operations, precise logistics, and predictive analysis, as well as to increase system precision.
- Digitization of demand-supply chain monitoring systems eventually demands returns and provides a better understanding of the issue. Artificial intelligence can analyze huge quantities of data that are well above the capabilities of humans.
- AI assists industry in reducing time to market and improving agreement with customers.
- Automated planning will positively reduce labour costs, increase manufacturing efficiency, and improve product quality.

THE FUTURE OF AI IN THE FOOD INDUSTRY

Based on a comprehensive review of the food industry literature, it is clear that there is a significant demand for investment in the food manufacturing and processing industry. AI-enabled systems can spot numerous difficulties in food production more readily than human-based systems. It has also been observed that researchers are heavily involved in this field. Gayama, a Switzerland agrotech firm, is an outstanding example of one such firm, having secured $3.2 million for an artificial-intelligence-driven initiative. The initiative is built on multispectral cameras that can detect tiny variations in water intensity, nutrition, pests, and crop yields. The artificial intelligence method

then detects potential intimidation and sends alarm signals to farmers so that they may plan accordingly. The artificial intelligence approach will also propose persuasive steps that farmers must do in order to make the most use of existing resources. Satellite data may also be used to study the Earth's surface utilizing ML and deep learning technologies (Sharma & Abraham, 2020). The major goal is to find areas where the government or its investors may provide assistance in enhancing the crop and therefore improving the outcome. It has also been noticed that farming is static and outmoded in many parts of the world. It may be phased out in the near future by smart farming. AI has the potential to apply smarter farming and, in some ways, alleviate the current issue in the near future. Smart farming might increase yields by at least 60% if implemented successfully. Although ML and AI are intriguing approaches, there will be a plethora of ways to eliminate waste in food manufacturing industries. 77 Lab, for example, has already created beautiful bots that can choose food directly from the plant, rendering manual labour obsolete (Bhatt et al., 2020) There have been numerous self-assisted selectors throughout history, but these beautiful bots use machine or deep learning to determine the maturity height of each fruit, distinguish fruits from different plants in a healthier way, and handle produce more accurately. As a result, these represent the future of emerging farming and food production sectors.

CONCLUSION

This study offered numerous data in a detailed manner to demonstrate the benefits and application of AI for food industries. The food sector is now employing the most basic degree of artificial intelligence. The role of AI is now becoming increasingly important as a result of its potential to improve food safety / hygiene, and waste management systems. AI will change the food processing sector in the future since it has the ability to create sustainable and healthful productivity for customers and staff. Utilization of AI and ML in the food production as well as service sectors is already pushing the industry to a novel step by reducing human errors in manufacture and, to a smaller extent, leftover excess product. It provides lower packaging and transportation costs, an increase in customer satisfaction, faster services, voice searches, and more tailored orders. These commercial advantages may also be reaped by large food companies, resulting in an actual benefit in the long term.

REFERENCES

Atkeson, A., & Kehoe, P. J. (2001). The transition to a new economy after the second industrial revolution.

Batista, J. C. L., & Marques, R. P. F. (2017). An overview on information and communication overload. *Information and communication overload in the digital age*, 1-19.

Bera, S. (2021). An application of operational analytics: For predicting sales revenue of restaurant. In *Machine Learning Algorithms for Industrial Applications* (pp. 209-235). Springer, Cham.

Bhatt, C., Kumar, I., Vijayakumar, V., Singh, K. U., & Kumar, A. (2020). The state of the art of deep learning models in medical science and their challenges. *Multimedia Systems*, 1-15.

Blaxter, M. (2003). *Health and lifestyles*. Routledge.

Blinder, A. (2007). Offshoring: The next industrial revolution. *Offshoring*, 1000-1017.

Blöcher, K., & Alt, R. (2020). AI and robotics in the European restaurant sector: Assessing potentials for process innovation in a high-contact service industry. *Electronic Markets*, 1-23.

Castillo, O., & Meliif, P. (1970). Automated quality control in the food industry combining artificial intelligence techniques with fractal theory. *WIT Transactions on Information and Communication Technologies*, *10*.

Dehghan-Dehnavi, S., Fotuhi-Firuzabad, M., Moeini-Aghtaie, M., Dehghanian, P., & Wang, F. (2020, June). Estimating participation abilities of industrial customers in demand response programs: A two-level decision-making tree analysis. In *2020 IEEE/IAS 56th Industrial and Commercial Power Systems Technical Conference (I&CPS)* (pp. 1-8). IEEE.

Dewi, T., Risma, P., & Oktarina, Y. (2020). Fruit sorting robot based on color and size for an agricultural product packaging system. *Bulletin of Electrical Engineering and Informatics*, *9*(4), 1438-1445.

Donepudi, P. K. (2014). Technology Growth in Shipping Industry: An Overview. *American Journal of Trade and Policy*, *1*(3), 137-142.

Fedorova, E., Darbasov, V., & Okhlopkov, M. (2020). The role of agricultural economists in study on problems related to regional food safety. In *E3S Web of Conferences* (Vol. 176, p. 05011). EDP Sciences.

Filimonau, V., Todorova, E., Mzembe, A., Sauer, L., & Yankholmes, A. (2020). A comparative study of food waste management in full service restaurants of the United Kingdom and the Netherlands. *Journal of Cleaner Production*, *258*, 120775.

Gerber, P. J., Steinfeld, H., Henderson, B., Mottet, A., Opio, C., Dijkman, J., ... & Tempio, G. (2013). *Tackling climate change through livestock: a global assessment of emissions and mitigation opportunities*. Food and Agriculture Organization of the United Nations (FAO).

Gillis, M., Perkins, D. H., Roemer, M., & Snodgrass, D. R. (1992). *Economics of development* (No. Ed. 3). WW Norton & Company, Inc..

Godfray, H. C. J., Beddington, J. R., Crute, I. R., Haddad, L., Lawrence, D., Muir, J. F., ... & Toulmin, C. (2010). Food security: the challenge of feeding 9 billion people. *science*, *327*(5967), 812-818.

Goodfellow, I., Bengio, Y., & Courville, A. (2016). Machine learning basics. *Deep learning*, *1*, 98-164.

Guptill, A., & Wilkins, J. L. (2002). Buying into the food system: Trends in food retailing in the US and implications for local foods. *Agriculture and Human Values*, *19*(1), 39-51.

Habicht, J. P., Pelto, G., Frongillo, E., & Rose, D. (2004, July). Conceptualization and instrumentation of food insecurity. In *Workshop on the Measurement of Food Insecurity and Hunger* (Vol. 15).

Kakani, V., Nguyen, V. H., Kumar, B. P., Kim, H., & Pasupuleti, V. R. (2020). A critical review on computer vision and artificial intelligence in food industry. *Journal of Agriculture and Food Research*, *2*, 100033.

LeCun, Y., Bengio, Y., & Hinton, G. (2015). Deep learning. *nature*, *521*(7553), 436-444.

Leung, X. Y., & Wen, H. (2020). Chatbot usage in restaurant takeout orders: A comparison study of three ordering methods. *Journal of Hospitality and Tourism Management*, *45*, 377-386.

Löw, F., Conrad, C., & Michel, U. (2015). Decision fusion and non-parametric classifiers for land use mapping using multi-temporal RapidEye data. *ISPRS Journal of Photogrammetry and Remote Sensing*, *108*, 191-204.

Lowder, S. K., Skoet, J., & Singh, S. (2014). What do we really know about the number and distribution of farms and family farms in the world? Background paper for The State of Food and Agriculture 2014.

Lyman, B. (2012). *A psychology of food: More than a matter of taste*. Springer Science & Business Media.

Mahalik, N. P., & Nambiar, A. N. (2010). Trends in food packaging and manufacturing systems and technology. *Trends in food science & technology*, *21*(3), 117-128.

Misra, N. N., Dixit, Y., Al-Mallahi, A., Bhullar, M. S., Upadhyay, R., & Martynenko, A. (2020). IoT, big data and artificial intelligence in agriculture and food industry. *IEEE Internet of Things Journal*.

Morais, R., Valente, A., & Serôdio, C. (2005, July). A wireless sensor network for smart irrigation and environmental monitoring: A position article. In *5th European federation for information technology in agriculture, food and environement and 3rd world congress on computers in agriculture and natural resources (EFITA/WCCA)* (pp. 845-850).

Morgan, K., & Murdoch, J. (2000). Organic vs. conventional agriculture: knowledge, power and innovation in the food chain. *Geoforum*, *31*(2), 159-173.

Müller, V. C., & Bostrom, N. (2016). Future progress in artificial intelligence: A survey of expert opinion. In *Fundamental issues of artificial intelligence* (pp. 555-572). Springer, Cham.

Onishchuk, M. O. (2020). *Opto-mechanical sorting of municipal solid waste* (Doctoral dissertation, ВНТУ).

Otterpohl, R., Grottker, M., & Lange, J. (1997). Sustainable water and waste management in urban areas. *Water Science and Technology*, *35*(9), 121-133.

Perrot, N., Trelea, I. C., Baudrit, C., Trystram, G., & Bourgine, P. (2011). Modelling and analysis of complex food systems: state of the art and new trends. *Trends in Food Science & Technology*, *22*(6), 304-314.

Pinel, F. (2015). What's cooking with chef watson? an interview with lav varshney and james briscione. *IEEE Pervasive Computing*, *14*(4), 58-62.

Ponnusamy, P., Ghias, A. R., Guo, C., & Sarikaya, R. (2020, April). Feedback-based self-learning in large-scale conversational ai agents. In *Proceedings of the AAAI Conference on Artificial Intelligence* (Vol. 34, No. 08, pp. 13180-13187).

Rary, E., Anderson, S. M., Philbrick, B. D., Suresh, T., & Burton, J. (2020). Smart sanitation—biosensors as a public health tool in sanitation infrastructure. *International Journal of Environmental Research and Public Health*, *17*(14), 5146.

Schmidt, R. H., & Piotter, H. M. (2020). The Hygienic/Sanitary Design of Food and Beverage Processing Equipment. In *Food Safety Engineering* (pp. 267-332). Springer, Cham.

Sharma, T. K., & Abraham, A. (2020). Artificial bee colony with enhanced food locations for solving mechanical engineering design problems. *Journal of Ambient Intelligence and Humanized Computing*, *11*(1), 267-290.

Soltani-Fesaghandis, G., & Pooya, A. (2018). Design of an artificial intelligence system for predicting success of new product development and selecting proper market-product strategy in the food industry. *International Food and Agribusiness Management Review*, *21*(1030-2019-593), 847-864.

Stone, M., Aravopoulou, E., Ekinci, Y., Evans, G., Hobbs, M., Labib, A., ... & Machtynger, L. (2020). Artificial intelligence (AI) in strategic marketing decision-making: a research agenda. *The Bottom Line*.

Stuiver, M., Leeuwis, C., & van der Ploeg, J. D. (2004). The power of experience: farmers' knowledge and sustainable innovations in agriculture. *Seeds of*

Transition. Essays on novelty production, niches and regimes in agriculture, 93-118.

Szegedy, C., Liu, W., Jia, Y., Sermanet, P., Reed, S., Anguelov, D., ... & Rabinovich, A. (2015). Going deeper with convolutions. In *Proceedings of the IEEE conference on computer vision and pattern recognition* (pp. 1-9).

Tilman, D., Fargione, J., Wolff, B., D'antonio, C., Dobson, A., Howarth, R., ... & Swackhamer, D. (2001). Forecasting agriculturally driven global environmental change. *science*, *292*(5515), 281-284.

Tripathi, S., Shukla, S., Attrey, S., Agrawal, A., & Bhadoria, V. S. (2020). Smart industrial packaging and sorting system. In *Strategic System Assurance and Business Analytics* (pp. 245-254). Springer, Singapore.

Tyagi, N., Khan, R., Chauhan, N., Singhal, A., & Ojha, J. (2021). E-Rickshaws Management for Small Scale Farmers using Big Data-Apache Spark. In *IOP Conference Series: Materials Science and Engineering* (Vol. 1022, No. 1, p. 012023). IOP Publishing.

Vadlamudi, S. (2018). Agri-Food System and Artificial Intelligence: Reconsidering Imperishability. *Asian Journal of Applied Science and Engineering*, *7*(1), 33-42.

Wang, X., Puri, V. M., & Demirci, A. (2020). Equipment Cleaning, Sanitation, and Maintenance. In *Food Safety Engineering* (pp. 333-353). Springer, Cham.

Yost, E., & Cheng, Y. (2021). Customers' risk perception and dine-out motivation during a pandemic: Insight for the restaurant industry. *International Journal of Hospitality Management*, *95*, 102889.

Younus, U. M. (2017). Fourth industrial revolution.

Yu, X., Lin, Y., & Wu, H. (2020). Targeted next-generation sequencing identifies separate causes of hearing loss in one deaf family and variable clinical manifestations for the p. R161C mutation in SOX10. *Neural plasticity*, *2020*.

Zhang, W., Ricketts, T. H., Kremen, C., Carney, K., & Swinton, S. M. (2007). Ecosystem services and dis-services to agriculture. *Ecological economics*, *64*(2), 253-260.

ISBN: 978-625-8423-28-0